The Standard of Measurement

LISTED
MH45225

682-LP Series Piston Meter
Liquefied Petroleum Gas (LPG)

Installation, Operation & Maintenance Manual

© Copyright 2017 Total Control Systems

WARNING: This equipment is for service on flammable liquid and gas under pressure and must be installed, operated, maintained, and serviced only by qualified personnel fully trained in all safety procedures and applicable federal, state, local, and industry codes. Failure to follow proper procedures for this class of equipment can result in property damage, serious injury or death from burns, fire, explosion or other hazards.

Table of Contents

Safety Warning Symbols	2
Receipt & Inspection	3
Notice	3
Authorized Use	4
Restrictions	4
Basic Safety Instructions	5
Meter Overview	6
Meter Specifications	7
Material of Construction	7
Procedures for LPG Meters	7
System Recommendations	8
Start Up Recommendations	9
Meter Calibration	10
Meter Calibration (Continued)	11
Meter Calibration (Continued)	12
Calibration Adjustment	12
Maintenance	13
Maintenance (Continued)	14
Storage Instructions	14
682-15 Meter Dimensions	15
682-15 Meter Assembly (Exploded View)	16
682-15 Meter Assembly (Bill of Material)	17
740-20 Vapor Eliminator/Strainer Assy. (Exploded View)	18
740-20 Vapor Eliminator/Strainer Assy. (Bill of Material)	19
757-10 Differential Valve Assembly (Exploded View)	20
757-10 Differential Valve Assembly (Bill of Material)	21
757-20 Differential Valve Assembly (Exploded View)	22
757-20 Differential Valve Assembly (Bill of Material)	23
782-20 Back Check Valve Assy. (Exploded View)	24
782-20 Back Check Valve Assy. (Bill of Material)	25
Torque Specifications	26
Torque Specifications (continued)	27
Meter Body Repair Instructions	28
Meter Bonnet Repair instructions	29
Compensator Shaft Seal Kit Instructions	30
Drive Shaft Seal Kit Instructions	31
Plunger Cup Replacement	32
Assembly of Strainer	33
Assembly of Vapor Eliminator	34
Assembly of Differential Valve	35
Assembly of Differential Valve	36
Assembly of In-line Check Valve	37
Meter Trouble Shooting	38
Vapor Eliminator Trouble Shooting	39
Differential Valve Trouble Shooting	39
MSDS	40
MSDS (Continued)	41
Notes	42
Warranty Information	43

Warning Symbols

CAUTION
Follow the warning instructions within the following information to avoid equipment failure, personal injury or death.

TURN POWER OFF
Before performing any maintenance, be sure to turn system power off to avoid any potential electric spark

FLAMMABLE
Flammable liquids and their vapors may cause a fire or explosion if ignited.

EYE PROTECTION
Pressurized systems may cause hazardous leaks and spray that may be dangerous for your eyes. Always wear eye protection around pressurized systems and its hazardous liquids.

INJURY
Wear gloves for protection from hazardous liquids that may cause irritation or burns.

READ
Read and understand all related manuals thoroughly. The Engineering and OIM manuals will provide the knowledge for all systems, maintenance and operation procedures. If you have any questions, please consult the factory.

Check us out at www.TCSmeters.com!

Receipt and Inspection

Upon receipt of your meter shipment, be sure to inspect the packaging and the flow meter assembly for any damage before signing the receipt for the shipment. If damage is evident or suspected, notify the delivery company and refuse receipt of the shipment.

Meters are individually boxed and are protected with packing material. Each package is identified with the flow meter assembly part number, description, direction of flow and serial number. Verify that the meter Identification Plate reflects the same model, size, and configuration as ordered. Contact your distributor if there is any discrepancy.

Meter assemblies should be handled with methods appropriate for the shape, size and weight involved. Appropriate clothing and shoes should be worn. Transport the meter package to the installation site with appropriate transportation methods, being careful not to damage the flow meter.

Be careful of any loose or protruding staples from the packaging, as they can be very sharp and may potentially cause injury.

If foam has been used to protect the meter, carefully remove the top foam layer before attempting to remove the meter assembly from the box. Foam packaging may be formed around the meter assembly making it difficult to remove. If the meter is bolted to a wood pallet, remove bolts while being careful not to let the meter tip over when the support has been removed. Do not lift the meter assembly by flex hoses, thermowells, wires, or pulsers. Also, do not lift the meter by putting objects into or through the meter. Removal of the meter assembly from its packaging without adhering to these warnings may cause serious injury or damage to the meter.

The wooden pallets and bases meet the ISPM 15 Guidelines for Regulating Wood Packaging Material in International Trade through the Timber Products Inspection Company (TP #2134).

Every effort has been made to remove the calibration fluid from the meter assembly before shipment. All TCS flow meters are plugged and enclosed in a plastic bag. A Material Safety Data Sheet (MSDS) can be reviewed on Page 40. Appropriate precautions should be taken regarding any personal, environmental and material compatibility with the end use system.

Notice

Total Control Systems (TCS) shall not be liable for technical or editorial errors in this manual or omissions from this manual. TCS makes no warranties, express or implied, including the implied warranties of merchantability and fitness for a particular purpose with respect to this manual and, in no event, shall TCS be liable for special or consequential damages including, but not limited to, loss of production, loss of profits, etc.

The contents of this publication are presented for informational purposes only, and while every effort has been made to ensure their accuracy, they are not to be construed as warranties or guarantees, expressed or implied, regarding the products or services described herein or their use or applicability. We reserve the right to modify or improve the designs or specifications of such products at any time.

TCS does not assume responsibility for the selection, use or maintenance of any product. Responsibility for proper selection, use and maintenance of any TCS product remains solely with the purchaser and end-user.

All rights reserved. No part of this work may be reproduced or copied in any form or by any means – graphic, electronic or mechanical – without first receiving the written permission of Total Control Systems, Fort Wayne, Indiana USA.

Authorized Use

Unauthorized use of the device 682-15 LPG may be dangerous to people, nearby equipment and the environment.

- The device is used exclusively as a meter system for measuring Liquid Propane in a Hazardous Area.
- Product Marking: UL MH45225 Listed Number
- The device complies with the requirements of UL 25, Meters for Flammable and Combustible Liquids and LP-Gas.
- The device is rated for operating pressures up to 350 PSI (24.1 bar).
- The device may be applied only as directed in the Meter Specifications and System Recommendations sections of this manual.
- The faultless and reliable operation of the metering system assumes correct installation and operation and maintenance. Any other use is regarded as unauthorized. Total Control Systems is not liable for any resulting damage. The user alone bears this risk.
- Because the unit is intended for operation at high operating pressures, all personnel involved in installation, operation and maintenance must be properly trained prior, in accordance with the requirements of this manual and to applicable safety and technical protocols.
- Only use this device for its intended purpose.

Restrictions

- Flow meters must be installed in accordance with the requirements of NFPA 58 in addition to all other State and local codes.
- The UL Certifications are only valid if the device is used as described in these operating instructions.
- When used in conjunction with electric solenoid controls, the UL Certification is only valid if the device used in conjunction with components that carry their own UL Certification. Otherwise the UL Certification for the meter device will be voided.
- If any unauthorized changes are made to the device or any components thereof, the UL Certifications will be voided.

Failure to observe this operating manual and its operating instructions as well as unauthorized tampering with the device release Total Control Systems from any liability and also invalidates the warranty covering the device and accessories!

Basic Safety Instructions

These safety instructions do not make any allowance for any:

- Contingencies and events which may arise during the installation, operation and maintenance of the devices.

- Local safety regulations in which the operator is responsible for observing these regulations, also with reference to the installation personnel.

Danger of Explosion!
- The device is part of a closed system and must not be removed during operation.
- Component parts, threaded fittings and lines attached to the meter system must not be removed during operation.

With Electronic Solenoids installed - Risk of Electric Shock!
Acute risk of injury from hazardous body voltage!
- Before performing any maintenance on the metering system, switch off the power supply to any electric solenoid controls and secure to prevent reactivation.
- Observe applicable accident prevention and safety regulations for electrical equipment.

Danger - High Pressure!
When disconnecting system, there is an acute risk of injury.
- Before disconnecting component parts, threaded fittings and lines attached to the meter system, turn off pumping system and close the pressure and vent the lines.
- During the installation, make certain that the flow direction is correct.
- Observe applicable accident prevention and safety regulations for pressurized devices.

Danger of Explosion caused by electrostatic charge!
If there is a sudden discharge from electrostatically charged devices or persons, there is a danger of explosion in the EX area.
- Using suitable measures, ensure that no electrostatic charges can occur in the EX area.
- Clean the device surface by gently wiping it with a damp or anti-static cloth only.

General Hazardous Situations.
To prevent injuries:
- Ensure that the system cannot be activated unintentionally.
- Installation and maintenance work may be carried out only by authorized technicians with the appropriate tools and training.
- After an interruption in the power supply or system pressure, ensure that the system is restarted in a defined and controlled manner.
- The device may be operated only when in perfect condition and in consideration of the operating instructions.

Meter Overview

The 682 meter is a true Positive Displacement Meter, with the inlet and outlet on the same horizontal plain (straight in - straight out). Within the meter, three (3) plungers are fitted within their respective cylindrical measuring chambers. The plungers are joined to a wobble plate, which has a shaft extending from its upper surface. The wobble plate also has a valve pivot attached underneath. The valve pivot drives a sliding valve from piston to piston as product flows, controlling the sequence of events.

The wobble plate shaft is always held at an inclined position by the center gear post, and the wobble plate itself is prevented from rotating by four guide pins on the pivot bracket assembly.

As product enters the meter, it initially flows into the upper housing. The sliding valve will now be in position to open one measuring cylinder. The plunger for that particular cylinder will be at the upper position. With the pressure below it relieved, and an upper housing full of product, the pressure on top of that plunger will cause it to move toward the bottom of the cylinder, thus forcing out the remaining product. As this occurs, another plunger will be forced from the down position to the upper position. The sliding valve moves via the wobble plate to open the inlet of this cylinder. As the plunger moves upward, it draws product into the measuring cylinder from the bottom. Once this plunger reaches the upper position, and the cycle will repeat, so long as product continues to enter the meter. If product flow stops, pressure in the meter equalizes and motion stops. Thus the meter only operates when product is flowing.

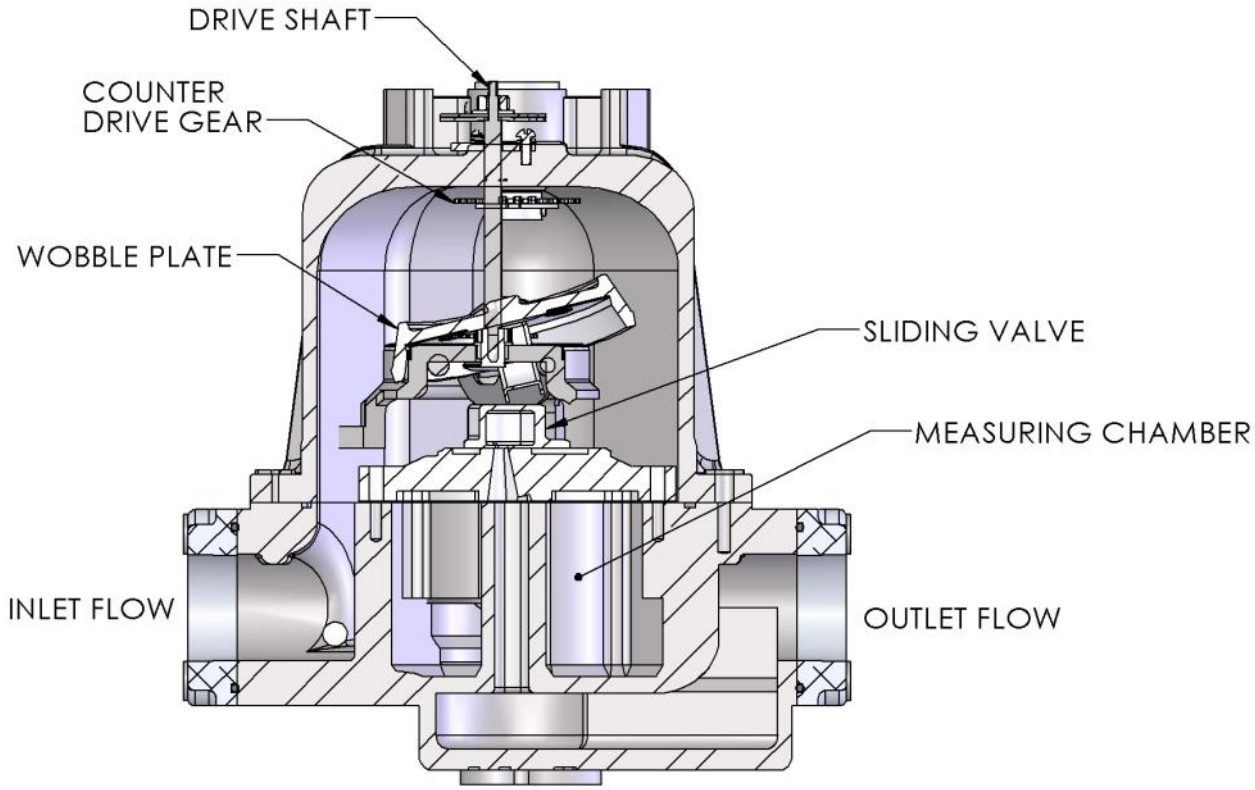

Meter Specifications & Materials of Construction

Flange Connection:	1-1/2" NPT Flanges, Standard; 1" & 2" NPT Flanges, Optional. BSPT or Slip Weld flanges available upon request.
Flow Rate:	0.5 to 50 GPM (1.9 to 380 LPM) with 757-20LP Differential Valve 0.5 to 26 GPM (1.9 to 98 LPM) with 757-10LP Differential Valve
Maximum Pressure:	350 PSI (24 BAR)
Working Temperature:	-40 F to 122 F (-40 C to 50 C)
Materials of Construction:	Housing: Ductile Iron Internals: Stainless Steel and Ni-Resist II Seals: UL Recognized Buna-N and FKM

Procedures for LPG Meters

This manual provides warnings intended to inform the owner/operator of the hazards present with this type of equipment. Knowledge of these warnings and avoidance of potential hazards is the sole responsibility of the owner/operator of the equipment. Neglect of that responsibility is not within the control of the manufacturer of this equipment, and the manufacturer bears no responsibility for damages, injuries or deaths resulting from improper or inappropriate use or servicing of the equipment.

¡WARNING!

All internal pressures must be relieved (to zero psi) before inspection, disassembly, or servicing of any part of this meter or metering system. Property damage and serious injury or death from fire or explosion could result from improper use of this equipment, or from maintenance of an improperly depressurized and evacuated meter and metering system. Always follow all federal, state, and local laws, ordinances, and industry codes when installing, operating, or servicing this equipment.

Procedure for Relieving Pressure in LPG Meters

NOTE: All procedures to depressurize and purge an LPG tank system must be performed out-of-doors in an open environment free from any ignition sources such as sparks, flames, or heat sources.

1. Close the belly valve of the supply tank.
2. Close the valve on the vapor return line.
3. Close the manual valve in the supply line on the inlet side of the meter. If no manual valve exists on the inlet side, consult the system manufacturer for procedures to depressurize the system.
4. Slowly open the valve/nozzle at the end of the supply line
5. After product is bled off, close the valve/nozzle at the end of the supply line.
6. Slowly crack the fitting on top of the differential valve to relieve the product pressure in the system. Product will drain from the meter system.
7. As product is bleeding from the differential valve, slowly reopen and close the valve/nozzle on the discharge line. Repeat this step until the product stops draining from the differential valve and discharge line valve/nozzle.
8. Leave the discharge line valve/nozzle open while working on the system.

System Recommendations

Meter Selection
The flow meter must be carefully chosen from the Meter Selection factors in the Engineering Manual. The meter must be selected based on the operating system and product characteristics. System variables include flow rate, temperature and pressure. Failure to select the correct flow meter may result in system failure or serious injury.

Vapor Elimination
In any system where the tank may be completely drained or multiple products manifold into one metering system, the possibility of vapor being present increases. The solution is an air or vapor eliminator located before the flow meter to vent the vapor from the system before it can be measured. Vapor elimination is required for all weights and measures regulatory approvals in custody transfer applications.

Control Valves
Safety and isolation valves should be used throughout the metering system. Differential Valves should be used to prevent vapor from entering the liquid flow meter (Vapor Eliminator required).

Best Plumbing Configuration
The flow meter must have a secure mounting to a riser or foundation, with the inlet and outlet piping securely supported to prevent any pipe stress on the flow meter. The system should be designed to keep the flow meter full of liquid at all times. Use full 1-1/2" pipe diameter throughout the metering system to allow for minimum pressure loss. The piping should be designed to prevent draining of the flow meter. The meter inlet and outlet should be lower than the system plumbing (sump position). The metering system should include a means for calibration.

Protection From Debris
On new installations, care must be taken to protect the meter from damage during start-up. It is recommended to put a strainer before the meter. Damage may result from the passage through the meter of dirt, sand, welding slag or spatter, thread cuttings, rust, etc. A spool can be fabricated and installed in place of the meter until the system is flushed. A spool is a flanged length of pipe equal in length to the meter and any accessories attached to the meter) such as an vapor eliminator or control valve. Another method is to temporarily bypass the plumbing containing the meter until the system is flushed. This will also protect the meter from debris. Once the system has run "clean" for a period of time the meter may be reinstalled or protective means removed.

Thermal Expansion
Most liquids will expand and contract with temperature. This is particularly true for LPG. In any system where there is a chance for liquid to be captured between closed valves without relief, thermal expansion will likely occur. This can create dangerously high pressures within the system. Care should be taken in designing the system in which thermal shock may occur by implementing Pressure Relief Valves or Thermal Expansion Joints in the system design.

Hydraulic Shock (Water Hammer)
Hydraulic shock is a rise in pressure, which happens when an operating system undergoes an immediate change in flow direction. This is most often the result of a rapid valve closure while the system is operating at a high flow rate. Hydraulic shock can damage any system component. Particularly susceptible are internal components of the meter, valves and pump. System design and improper operating procedures will contribute to the seriousness of this problem. In order to eliminate hydraulic shock, the valve closure rate must be slowed. The use of 2-stage preset control valves or surge suppressing bladders or risers will help reduce or eliminate this problem.

Calibration
The meter shall be tested and calibrated with the product it is intended to measure when installed. Total Control Systems shall not be responsible for loss of product or any damages resulting from the end user's failure to test this meter to insure proper calibration. Every 682 Series meter is tested and calibrated at the factory to prove that the meter can be calibrated in tour system. It is the owner's responsibility to report this device to the local Weights and Measures officials for their inspection before the meter is put to use.

Start up Recommendations

¡WARNING!

Test equipment should be grounded to prevent a possible spark. Test area should have no ignition source. Operators should wear personal protection and prevent any product exposure and environmental issues.

Start-up instruction for new installations or after maintenance and repairs:

1) Only properly trained personal should design, install, or operate metering system.

2) Remove plastic threaded plugs placed in meter for shipping protection. They are not to be used in meter system because of the PVC plugs low rated pressure, compatibility, and sealing issues.

3) Place the meter in an area with ample workspace, secure from vibration, and pipe line stress. Mount and bolt down on to a fixed stand or platform. This prevents meter stress, which will cause leakage and metal fatigue.

4) Apply thread sealing compound and gasket materials that are compatible with product.

5) Do not weld to the meter or accessories. This will weaken housings, cause O-ring and casting leaks and potentially distort the critical tolerances within the flow meter.

6) Always wear safety protection equipment such as goggles, steel toed shoes, gloves and full body clothing.

7) Be sure to install a pressure relief valve or expansion joint in the system to protect against thermal expansion.

8) Make sure all system components and meter assembly bolts are properly secured and tightened.

9) Make sure the vapor eliminator vapor release is properly vented and piped back to the supply tank.

10) Make sure electrical connections are properly installed and start/stop switches are off and locked-out.

11) Ensure that there is flooded suction to the pump and that the fluid is available to the system to prevent the starving or cavitation of the pump.

12) Ensure slow flooding of system. **Start up system with all shut off valves in the closed position.** When a pump is turned on and a valve opened in a new, dry system, tremendous liquid and air pressure can be built up in the piping and forced through the meter. The high pressure and volume of air causes the meter to rotate more rapidly than normal. When the fluid product reaches the meter, there is an abrupt slowing of the meter rotors. This can cause damage to the register, rotor shafts, packing gear and/or blade, timing gears and other components.

    The recommended method of starting any system is to flood the piping gradually. This allows product to slowly force the air or vapor from the entire system.

13) When operating the meter with accessories, valves should be opened slowly to avoid a pressure surge that can damage the meter or air eliminator. System pressures should be maintained below 350 PSI (24 BAR).

14) Custody transfer metering systems must be calibrated by a regulatory agency before product can be sold off the meter. Contact your local authorities for proper calibration.

15) Strainers should be cleaned frequently or have a maintenance schedule. This will ensure a clean system and long service life.

Meter Calibration

The method of proving should be selected, and necessary provisions made, during the design stage of the installation. Use only an accurate, specifically and scientifically designed prover. No other kind should be used. All provers should be checked periodically for accuracy. Weights and Measures officials have been very cooperative in giving assistance in checking provers.

Use an Accurate Prover
Scientifically designed provers are commercially available for proving meters, and no other kind should be used. In addition, since LPG systems are closed systems, a specially designed prover is a must for proving meters for LPG.

Scientifically designed test measures have proper drainage means built into them, a calibration gauge glass neck and protection against deformation (which would cause volume changes).

Scientifically designed provers are not merely truck compartments or drums. A "homemade" prover, whether a drum or a tank is not likely to be satisfactory, and may cause expensive errors due to inaccurate meter calibration.

Even scientifically designed provers should be checked periodically for accuracy. Weights and Measures officials have been very cooperative in giving assistance to checking privately owned volumetric provers.

A detailed description of LP Gas test procedures may be found in the NCWM Course 305 "Liquefied Petroleum Gas Liquid Measuring Devices".

Recommended size of test measure
The prover capacity should be equal to at least one minute's flow through the meter at its maximum rate.

Setting the Prover
The prover should be set level, using the levels provided on the prover, or separate leveling means. This insures consistent results when moving the prover from meter to meter and provides the basis for accurate readings on the prover scale..

Where to Test a Meter
The best place to test a meter is in its normal operating position, instead of a test stand. In this way, the correctness of the installation and of the operating conditions of the system will be verified by the test. Always test a meter with the same liquid it is to measure. Even slight differences in viscosity, temperature or system plumbing can have a significant effect on meter accuracy.

Discharge Line from Meter
Where a portable prover is used, the liquid is generally discharged into the prover in the same manner as a normal delivery would be made (with a hose reel and LPG fitting, for example). Where a special delivery test connection is used, the discharge line must be arranged to drain to the same point on each test. The meter flow rate and start and stop must be controlled at the end of the discharge line.

Wetting the Prover
Reset the meter register to zero, and fill the prover to the zero line or 100% marking of the scale. Disregard this meter reading. Drain the prover and reset the register. The reason for disregarding the first meter reading is that the prover must be wetted. The calibrated capacity of the prover has been determined by its manufacturer based its wet measure capacity. Once wetted, the prover will be wet for all the subsequent tests to be run.

Meter Calibration (Continued)

Always empty the prover with the same procedure. You must ensure that the prover is completely empty prior to closing the dump valve. This time interval must be the same for each test to ensure uniform results. If a considerable length of time is to elapse between tests (lunch break or phone call), the wetting operation can be eliminated by allowing the prover to remain full until the next test is to be run.

Making the Tests

The setup is now ready for accuracy the test. Reset the register to zero, and run the required test quantity through the meter. Do not exceed the maximum recommended rate of flow for the meter. Maximum and minimum recommended rates of flow for the 682 piston flow meters are marked on the identification plate.

Determining Test Results

Run the meter close to the mark on the indicator corresponding to the full prover capacity. Read the over or under delivery in cubic inches, gallons or percent on the calibrated plate on the neck of the prover. If the plate is calibrated in cubic inches, the percentage error can readily be computed on the following basis:

One gallon is equal to 231 cu.in.

Example: A 100-gallon prover holds 23,100 cu.in. Therefore, 23.1 cu.in. represents 0.1% error.

Meter Tolerance

In the United States, the National Institute of Standards and Technology, in NIST Handbook 44, plus or minus tolerances are according to the following:

Indication of Device	Tolerance			
	Acceptance Test	Maintenance Test	Special Test	Repeatability
Wholesale or Vehicle	0.6%	1.0%	1.0%	0.40%

In Europe, plus or minus tolerances are specified by OIML R117-1. In Canada, the plus or minus tolerances are specified by the National Measurement Act.

Indication of Device	Tolerance			
	Acceptance Test	Maintenance Test	Special Test	Repeatability
Europe	0.6%	1.0%	N/A	0.40%
Canada	0.6%	1.0%	N/A	0.40%

Acceptance tolerances apply to new meters and repaired meters after reconditioning. Maintenance tolerances apply to meters already in service. Special tolerances apply to meters in the United States only, for special instances as determined by weights and measures officials.

Changing Meter Calibration

Refer to meter literature for method of changing meter calibration. Any change in the meter calibration adjustment will change the delivery in the same amount for all rates of flow. That is, the calibration curve retains its shape, but is moved up or down. Therefore, if a meter tests satisfactorily at full flow, but drops off too much at low flow, changing the calibration will not remedy this condition; it will bring the low flow test to 100%, but it will also bring the full flow above 100% by the same amount that the low flow was raised. A condition of this kind is caused either by the metering system, need for meter cleaning or repairs, or because of an attempt to retain accuracy below the

Meter Calibration (Continued)

Repeatability
Consider the percentage error readings from each test run made at the same flow rate and draft size (calibration run). The difference between the reading with the highest value and that with the lowest value must be less than a value which is 40% of the applicable maintenance tolerance.

Temperature Correction
If the conditions of testing are such that there will be a change of more than a few degrees in the temperature of the liquid between the time it passes through the meter and the time the prover is read, it will be advisable to make a temperature correction to the prover readings. To do this, it is necessary to install thermowells in the system, to take readings of the temperature of the liquid at the meter and in the prover. Corrections can then be easily made by the use of the National Standard API Tables.

Calibration Adjustment

When changing calibration you are adjusting the stroke of each piston, thus it is adjusting the volume the meter. One complete turn of the adjuster disc is equal to a 3% change in the Meter Volume. Use the following the following formula to calculate the Adjuster percent to increase or decrease the Meter Volume.

$$\% \text{ Correction} = \frac{\text{Prover Volume} - \text{Meter Volume}}{\text{Prover Volume}} \times 100$$

The top disc on the calibrator has a tab sticking up. The tab is marked with a "plus" and a "minus" sign. This indicates "plus" product and "minus" product. By turning the disc in one direction or the other, product delivery will be increased or decreased.

NOTE: *Only a valve at the prover should be used to control the flow during calibration.*

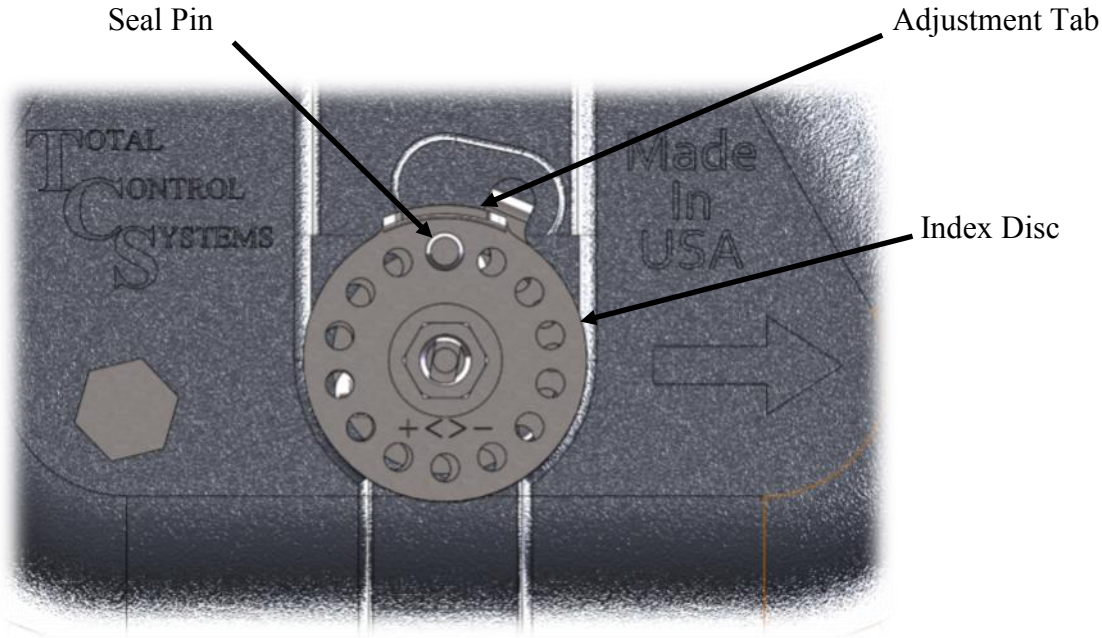

Maintenance

¡WARNING!

Test equipment should be grounded to prevent a possible spark. Test area should have no ignition source. Operators should wear personal protection and prevent any product exposure and environmental issues.

1). Keeping accurate maintenance and calibration records can be an excellent tool in determining the frequency of inspection or maintenance for a system. As the meter wears, the calibration will be affected and require adjustment. A personality profile can be created for each meter to help guide in a maintenance schedule.

2). Great care should be utilized in the maintenance of the metering system. Personal safety protection, environmental hazards, and government regulations need to be the foremost priority. Only fully trained personnel should be involved in maintenance. Failure to use original TCS replacement parts will void any Weights & Measures approvals and risk damage to the meter system.

3). ALWAYS RELIEVE INTERNAL SYSTEM PRESSURE TO ZERO BEFORE DISASSEMBLY OR INSPECTION.

4). SERIOUS INJURY OR DEATH FROM FIRE OR EXPLOSION COULD RESULT FROM MAINTENANCE OF AN IMPROPERLY DEPRESSURIZED AND EVACUATED SYSTEM.

5). Total Control Systems flow meters and accessories are often used with LPG, petroleum, solvents, chemicals, and other liquids that may be explosive, extremely flammable, very toxic, oxidizing, and corrosive. Severe injury or fatalities may result if appropriate safety precautions are not followed.

6). Before replacing or cleaning filter/strainer screen, the electrical system must be turned off. Product needs to be drained from system. Collect all product and return to storage or dispose of properly. Replace all drain plugs that were removed. Personal safety protection must be worn at this time. Make sure there is adequate ventilation in the area. The metering system will not completely drain so make sure you collect extra product when you remove the strainer cover. Clean the screen once a week, or more often if there is a lot of sediment in the system. Make sure there is no ignition source and the system is grounded. Replace all plugs that were removed for drainage.

7). The metering system is heavy and awkward so take precaution to handle it properly.

8). Do not use force to disassemble or use a screwdriver to pry open any part of the metering system. Have the proper tools available before trying to repair the meter system. Use caution when handling the internal parts as they can be sharp and heavy. Do not drop housing or rotors as they can cause injury and can be damaged or destroyed. Use caution when inspecting and aligning the timing gears and rotors as they can pinch fingers. Turn these slowly to verify smooth operation.

9). When inspecting the spring loaded differential valve do not place anything inside the housing, as the action of the valve will pinch this object when the valve closes.

Maintenance (Continued)

¡WARNING!

Test equipment should be grounded to prevent a possible spark. Test area should have no ignition source. Operators should wear personal protection and prevent any product exposure and environmental issues.

10). When removing gaskets or O-rings, carefully check for damage or corrosion. Any cracked, rough, worn, elongated or swollen O-rings must be replaced. When replacing the O-rings, place grease along the inside of the O-ring groove or completely around the O-ring to help the O-ring stay in the O-ring groove during assembly. If an O-ring is pinched or not in the O-ring groove, the meter system will leak and cause serious problems to the environment and equipment. Collect all replaced parts and dispose of properly. Do not weld any part of the meter system or accessories as this will weaken the part and allow for leaks.

11). All bolts and screws must be coated with Anti-Seize lubricant. Follow the torque specifications for each flow meter, air eliminator, strainer or preset valve bolt found on pages 26 and 27.

12). Recommended levels of maintenance and inspection will depend upon the system variables, such as the characteristics of the products being measured (viscosity, corrosiveness, suspensions, etc.), system pressure requirements, government or company regulations, and the age of the metering system. If hydrostatic testing is required, the system pressure should not exceed 5 times the marked meter pressure. It is not recommended to pneumatically test the meter system at anytime.

13). If any component of the meter system is removed from the system, it should be thoroughly flushed with a compatible liquid. After this is done, immediately refill the meter or accessory with a compatible liquid to prevent corrosion and water build up.

Storage Instructions

Short periods of non-use of the meter (a week or less) should present no problem, provided that the meter remains full of product. For long periods of non-use, such as winter storage, the following procedure is recommended. Before long-term storage, it is recommended that the meter be calibrated to verify that it is functioning properly.

1). To store the meter when it is left in line, flush the system with clean water until 70-80 gallons of water have passed through the meter.
2). Pump a 50% anti-freeze / 50% water solution through the entire system (100% RV antifreeze may be used instead). With the pump running, shut off a valve downstream from the meter, making sure that the system is full of anti-freeze solution to that point. Then close an upstream valve, such that the meter remains full of anti-freeze solution.
3). Remove the register from the meter, and lubricate the drive coupling shaft. After lubrication, reassemble the register onto the meter.

When starting the system after a period of storage, it is recommended that the meter calibration be rechecked.

682-15LP Meter Dimensions

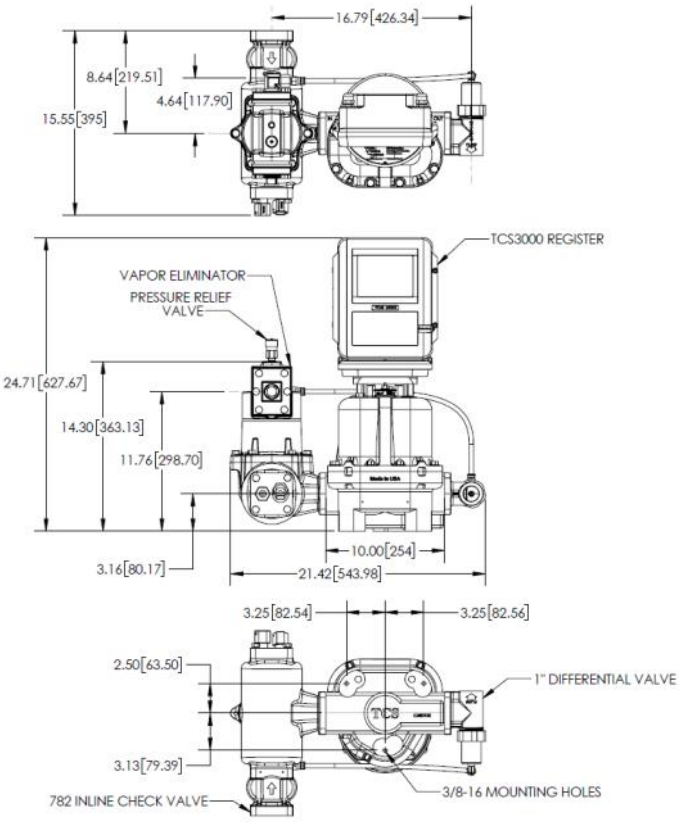

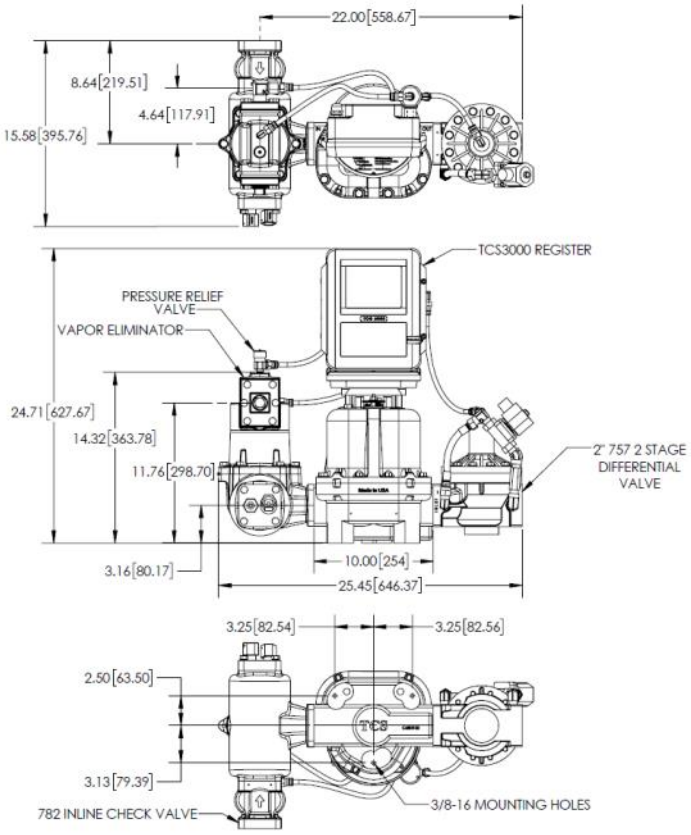

Measurements are in inches [millimeters]

682-15 Meter Assembly

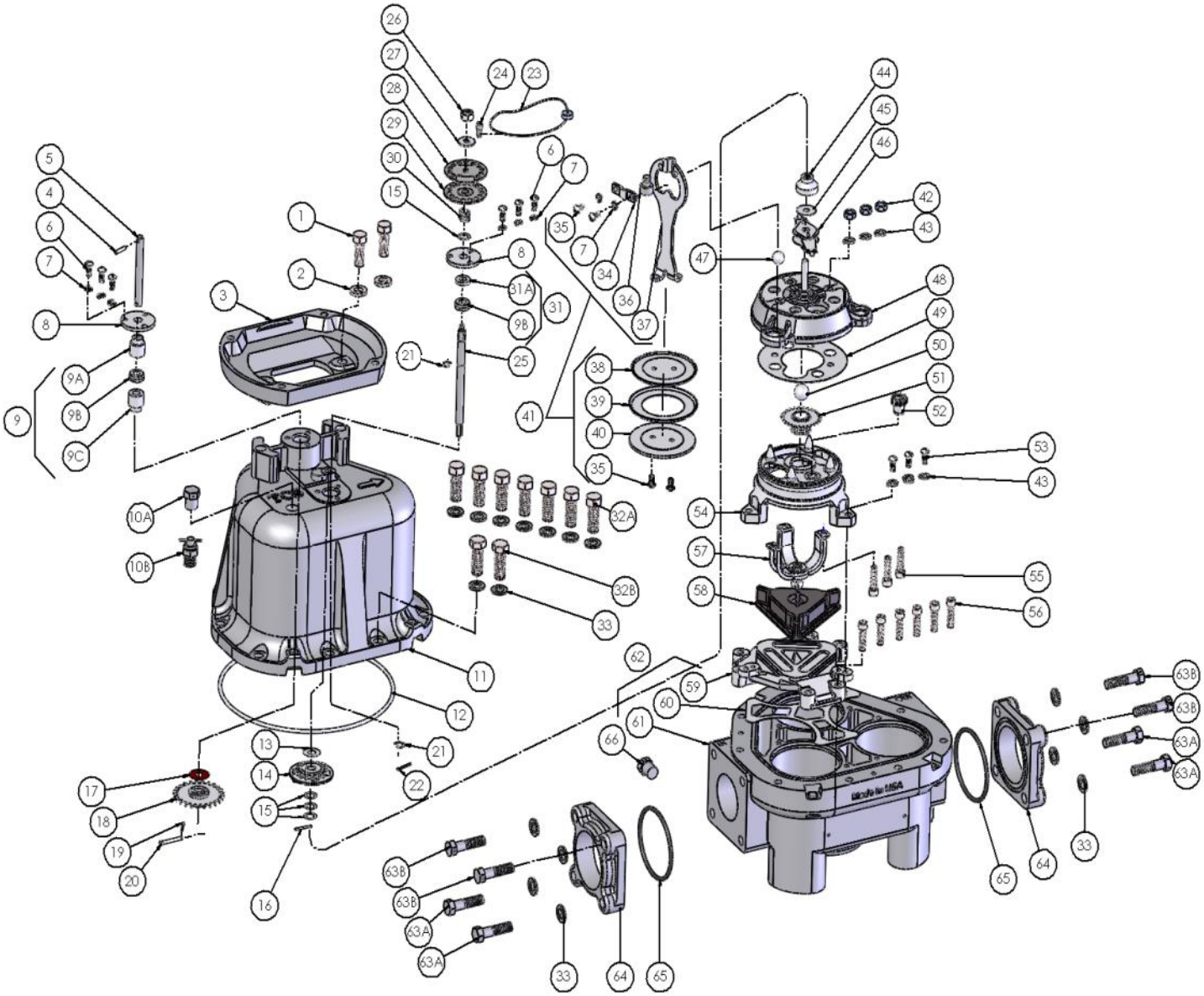

682-15LP Meter Assembly

Item	Description	Qty	682-15LP
1	Screw, 3/8-16 x 1-1/8 Hex	2	297-050361
2	Washer, 3/8 Split Lock	2	15-050641
3	Counter Support	1	1-312518
4	Roll Pin	1	3-130752
5	Drive Shaft	1	1-126900
6	Screw, 10-24 x 1/2	6	1-128279
7	Washer, #10 Split Lock	12	1-126316
8	Compression Washer	2	1-130872
9	Drive Shaft Packing Kit	1	226199-3
10A	Pipe Plug, 1/4"	1	2-126146
10B	Bleeder Valve	1	-
11	Cover & Post Assembly	1	680253
12	O-Ring	1	680710
13	Washer, 3/4 OD x 0.015 Rulon	1	1-125120
14	Counter Drive Gear Assembly	1	226136-1
15	Washer, 9/16 OD x 0.010 Thick	4	1-126903
16	Cotter Pin, 1/16 x 1/2	1	1-126318
17	Washer, 7/8 OD x 0.15 Rulon	1	1-125407
18	Drive Shaft Gear	1	226135-1
19	Cotter Pin, 3/16 x 1-1/4	1	13-052870
20	Drive Shaft Pin 1/4 x 1-3/32	1	1-126913
21	Retaining Ring, 0.320 ID x 0.025 T	1	12-053420
22	Cotter Pin, 1/16 x 1/2	1	-
23	Seal Wire and Seal	1	1-118849
24	Seal Pin	1	1-019602
25	Compensator Shaft	1	680803
26	Nut, 5/16-18	1	2-050301
27	Compensating Washer	1	1-126927
28	Index Disc	1	2-126931
29	Index Plate	1	1-226085
30	Compression Spring	1	1-130935
31	Compensator Shaft Seal Kit	1	227000-3
32A	Screw, 3/8-16 x 1-1/4	7	700063
32B	Drilled Screw, 3/8-16 x 1-1/4	2	700063D
33	Flange Washer	17	702018
34	Bearing Retainer, Plunger	3	1-126957
35	Plunger Screw, 10-32 x 3/8	12	1-126329
36	Bearing Seat, Plunger	3	1-130908
37	Piston Connector, Plunger	3	1-126939
38	Plunger Disc	3	1-126878
39	Plunger Cup Kit (3 Cups)	1	218769-1
40	Plunger Cup Support	3	1-126876
41	Plunger Assembly	3	219407-3
42	Nut, 1/4-20	3	1-126321
43	Washer, 1/4 Split Lock	6	1-126317
44	Slack Roller Assembly	1	219800-1
45	Washer, 0.863 OD x 0.030 Rulon	1	1-125103
46	Slack Spring Assembly	1	221403-2
47	Ball, 1/2 Dia.	3	2-130905
48	Wobble Plate Assembly	1	219331-2
49	Wear Plate	1	1-217934
50	Ball, 5/8 Dia.	1	1-130905
51	Main Pivot Assembly	1	219572-4
52	Compensating Pinion	1	2-129607
53	Screw, 1/4-20 x 3/4	3	1-126327
54	Main Pivot Bracket Assembly	1	218236-2
55	Slotted Screw, 1/4-20 x 1	3	1-126962
56	Screw, 1/4-20 x 1	6	1-126326
57	Bracket	1	3-218608
58	Valve	1	1-219330
59	Seat	1	1-038618
60	Seat Gasket	1	1-038619
61	Body Assembly	1	680116
62	Body, Seat, and Pin Assembly	1	680126
63A	Flange Bolts, 3/8-16 x 1-1/2	4	702026
63B	Drilled Flange Bolts, 3/8-16 x 1-1/2	4	702026D
64	Flange; 1-1/2" NPT	2	701601
	Flange; 1-1/2" BSPT	2	701621
65	Flange O-ring	2	702025
66	Pipe Plug, 1/4" NPT	1	2-126146

740-20LP Vapor Eliminator & Strainer Assembly

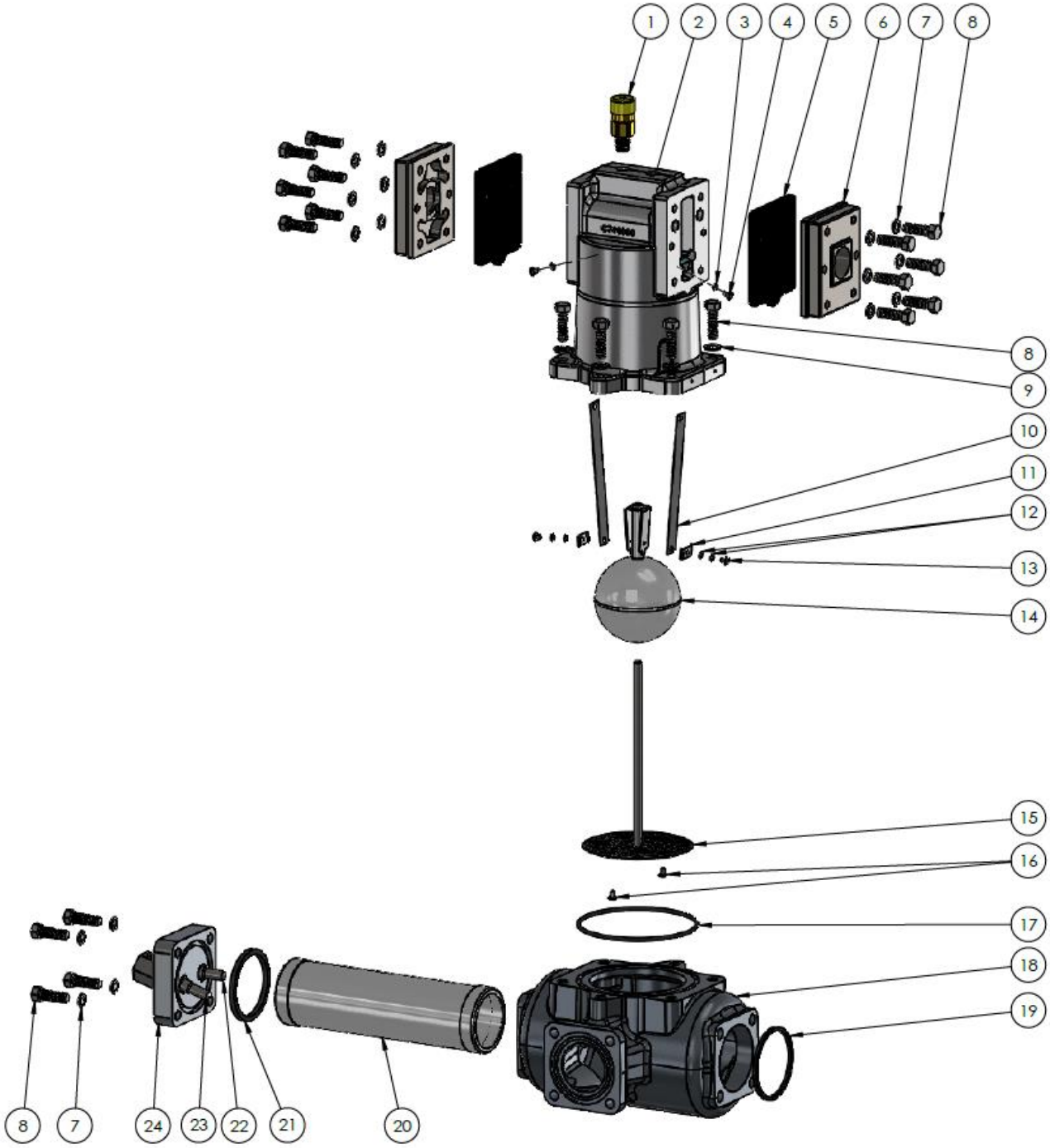

740-20LP Strainer Assembly

Item	Description	Qty	700-740-20LP
1	1/4” Hydro Relief Valve	1	740110
2	LPG Air Eliminator Housing	1	740060
3	# 8 Split Lockwasher	2	740017
4	8-32 x 1/4 Phillip Pan Head	2	740030
5	Valve Plate, Nitrite	2	740206
6A	3/4” NPT Outlet Cover, LPG	2	740115
6B	3/4” BSPT Outlet Cover; LPG	2	740116
7	Ring Washer SM OD	12	740051
8A	5/16-18 x 1-1/2 Grade 8 Bolt	10	740056
8B	5/16-18 x 1-1/2 Grade 8 Bolt, Drilled	2	740056D
9	Special Spacer	6	702018
10	Reed Vapor Eliminator	2	740007
11	Retaining Clip	2	740012
12	# 8 Split Lockwasher	4	740017
13	8-32 x 1/4 Phillip Pan Head	2	740030
14	Float and Stop Assembly	1	740034
15	Diffuser/Shaft Assembly	1	740035
16	8-32 x 1/4 Phillip Pan Head	2	740030
17	Top Seal (Buna)	1	740053
18	Aluminum Strainer Housing	1	742081
19	Flange Quad Ring	1	702025
20	Strainer Basket 100 Mesh	1	742025
21	Seal Ring (Buna)	1	742024
22A	1/2” NPT x 2” Aluminum Temperature Thermowell	1	740300
22B	1/2” NPT x 2” Stainless Steel Temperature Thermowell	1	740400
23A	3/8” NPT x 2” Aluminum Temperature Reference Port	1	740305
23B	3/8” NPT x 2” Stainless Steel Temperature Reference Port	1	740405
24	ATC Basket Cover	1	742355

757-10LP Differential Valve Assembly

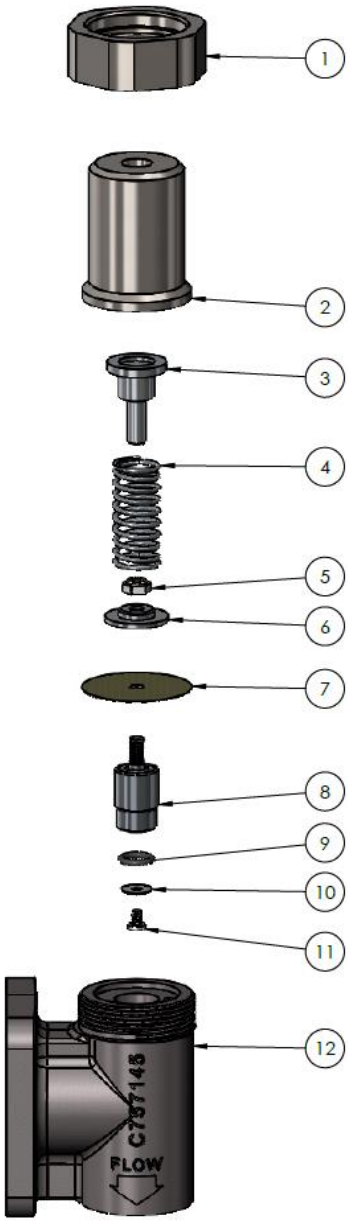

757-10LP Differential Valve Assembly

Item	Description	Qty	700-757-10LP
1	Steel Nut	1	757137
2	Cap	1	757135
3	Spring Stop	1	757130
4	Spring	1	757155
5	Nut	1	752024
6	Diaphragm Disc	1	757125
7	Diaphragm	1	757140
8	Seal Housing	1	757120
9	O-ring	1	757124
10	Seal Cap	1	757123
11	Screw	1	740030
12A	1” NPT Valve Housing	1	757145
12B	1” BSPT Valve Housing	1	757148

757-20LP Differential Valve Assembly

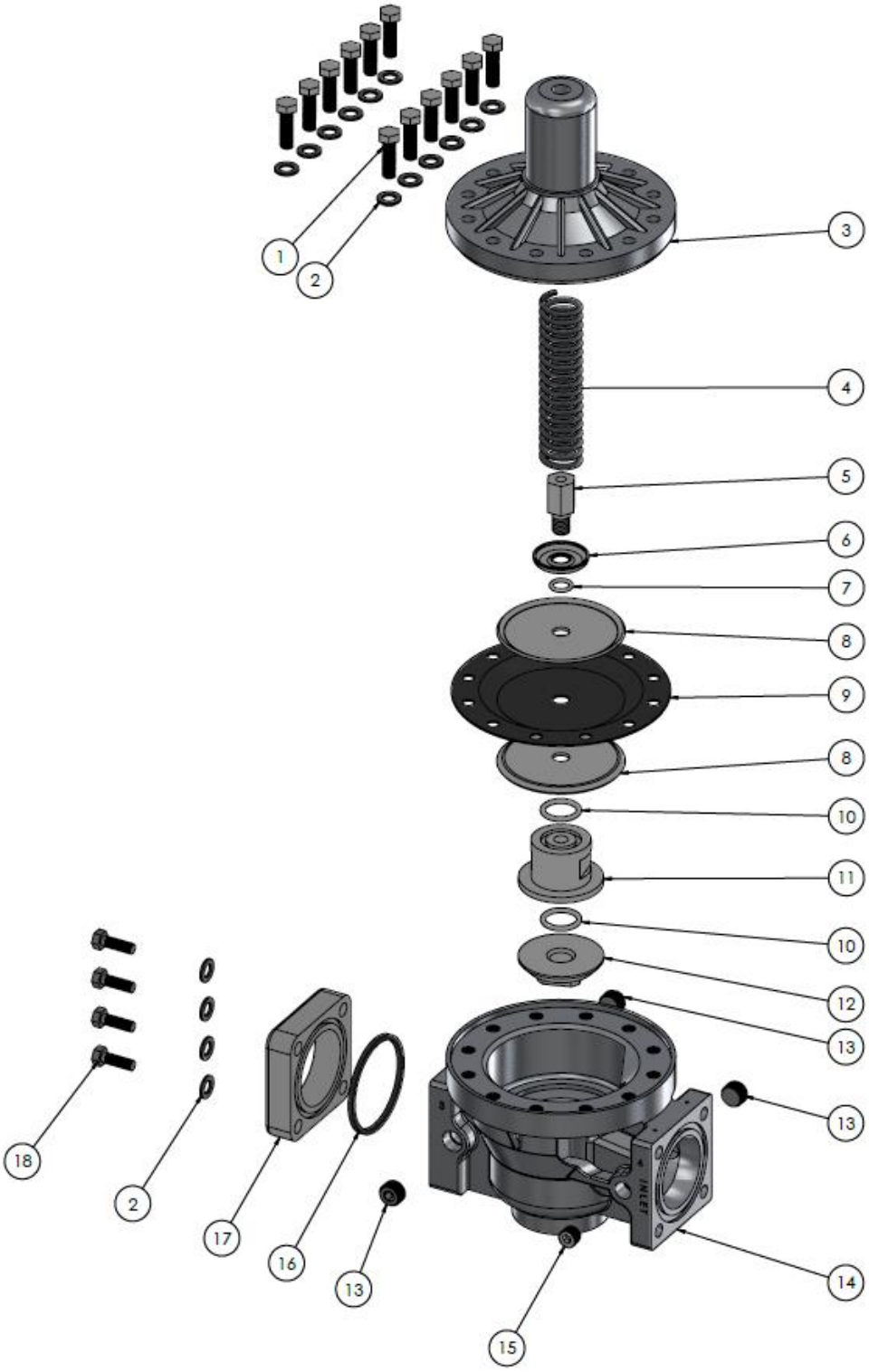

757-20LP Differential Valve Assembly

Item	Description	Qty	700-757-20LP
1	Screw	12	700063
2	Spacer	16	702018
3	Valve Cap	1	757035
4	Valve Spring	1	757055
5	Diaphragm Adapter	1	757010
6	Spring Retainer	1	757005
7	O-ring Seal	1	757025
8	Diaphragm Back Plate	2	757001
9	Diaphragm	1	757040
10	O-ring Seal	2	757020
11	Diaphragm Poppet	1	757030
12	Seat; Delrin	1	757015
13	Socket Plug; 3/8” NPT	3	700064
14	Valve Housing	1	757110
15	Hex Plug; 1/4” NPT	1	757075
16	Quad Ring; Flange	1	702025
17A	Flange; 2” NPT	1	702613
17B	Flange; 2” BSPT	1	702621
18	Screw	4	700026

782-20LP In-Line Check Assembly

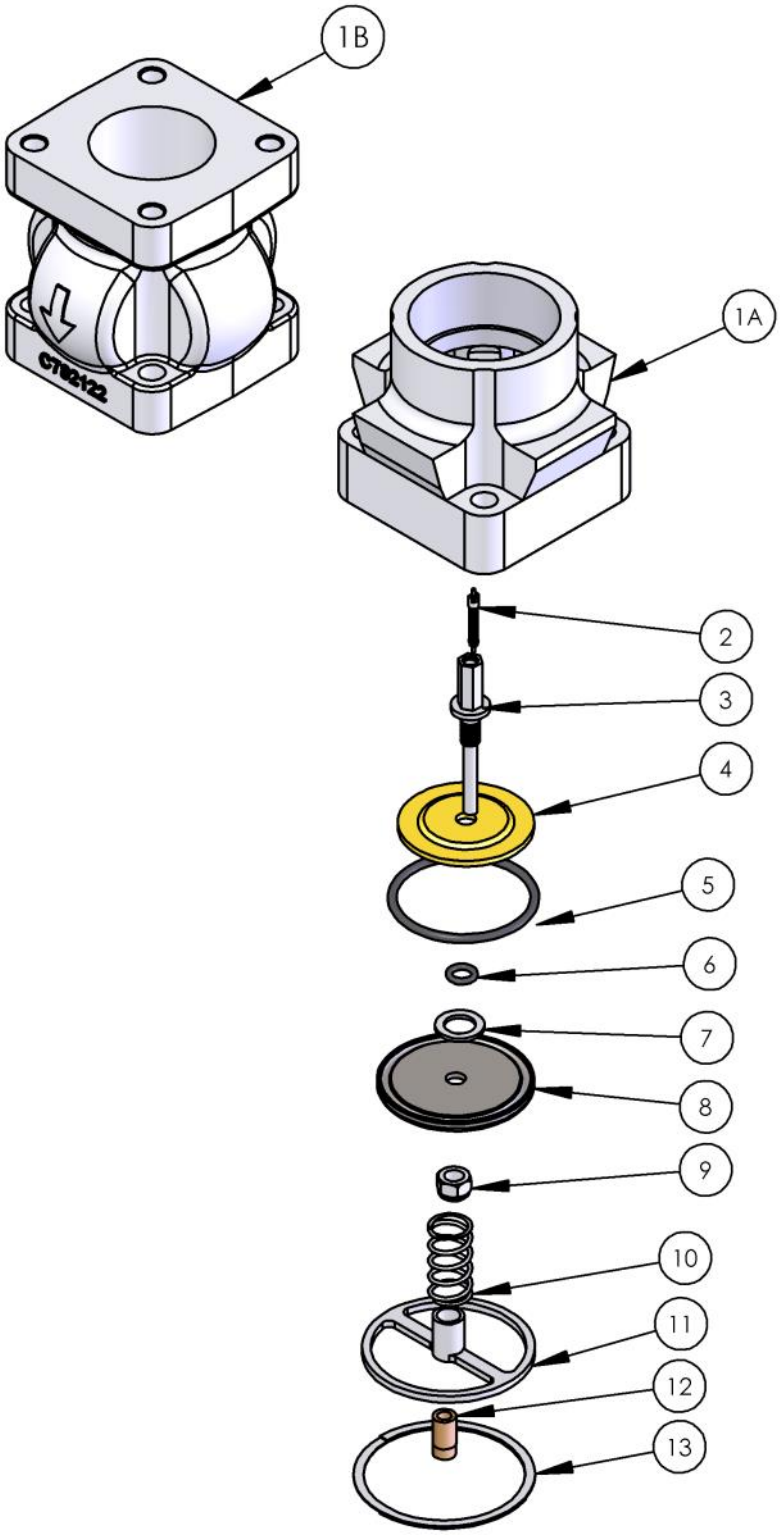

782-20LP In-Line Check Assembly

Item	Description	Qty	700-782-20LP
1A	Housing , 2” NPT	1	782022
1B	Housing, Flanged		782122
1C	Housing, 2” BSPT	1	782024
2	Pressure Relief Valve	1	782028
3	Valve Stem	1	782025
4	Piston Ring	1	782030
5	O-ring Main Seal	1	782060
6	O-ring	1	782065
7	Special Spacer	1	703018
8	O-ring Retainer	1	782040
9	5/16-18 Nylock Nut	1	782085
10	Spring	1	782050
11	Spring Holder	1	782055
12	Bearing Sleeve	1	782075
13	Retaining Ring	1	782070

Torque Specifications

682-15 METER ASSEMBLY

Part Number and Description	Tool	Bolt/Nut Size	Foot Lbs.		Newton Meters	
			Unlubricated	Lubricated	Unlubricated	Lubricated
TCS 600054	$^{9}/_{16}$" Hex Wrench/Socket	$^{3}/_{8}$-16 UNC	30	22.5	40.6	30
TCS 700054	$^{9}/_{16}$" Hex Wrench/Socket	$^{3}/_{8}$-16 UNC	19.7	11.8	26.7	16
TCS 297-050361	$^{9}/_{16}$" Hex Wrench/Socket	$^{3}/_{8}$-16 UNC	30	22.5	40.6	30
TCS 1-126353	$^{9}/_{16}$" Hex Wrench/Socket	$^{3}/_{8}$-16 UNC	19.7	11.8	26.7	16
TCS 1-128279	Slotted Screwdriver	10-24 UNC	1.9	1.1	2.6	1.5
TCS 702017	$^{9}/_{16}$" Hex Wrench/Socket	$^{3}/_{8}$-16 UNC	19.7	11.8	26.7	16
TCS 702037	$^{9}/_{16}$" Hex Wrench/Socket	$^{3}/_{8}$-16 UNC	19.7	11.8	26.7	16
TCS 1-126329	Slotted Screwdriver	10-32 UNF	1.9	1.1	2.6	1.5
TCS 1-126321	$^{7}/_{16}$" Hex Wrench/Socket	¼-20 NUT	6.3	3.8	8.5	5.2
TCS 1-126327	Slotted Screwdriver	¼-20 UNC	6.3	3.8	8.5	5.2
TCS 1-126326	$^{7}/_{16}$" Hex Wrench/Socket	¼-20 UNC	6.3	3.8	8.5	5.2

740-20-LP VAPOR ELIMINATOR/STRAINER ASSEMBLY

Part Number & Description	**Tool**	**Bolt Size & Material**	**Foot Lbs. (+/- 10%)**		**Newton Meter (+/- 10%)**	
			Dry	**Lubricated**	**Dry**	**Lubricated**
Cover Plate Screws	1/2" hex wrench/socket	TCS 740056 5/16-18 SAE Grade 8	20	16	27	22
Cap Screws	9/16" hex wrench/socket	TCS 700063 3/8-16 SAE Grade 8	36	29	49	39
Reed Screws	Phillips screwdriver	TCS 740030 8-32 316 SS	1.8	1.4	2.4	1.9
Diffuser Screws	Phillips screw-driver	TCS 740030 8-32 316 SS	1.8	1.4	2.4	1.9
Basket Cover	9/16" hex wrench/ socket	TCS 700063 3/8-16 SAE Grade 8	36	29	49	39

Torque Specifications (Continued)

757-20-LP DIFFERENTIAL VALVE ASSEMBLY

Part Number & Description	Tool	Bolt Size & Material	Foot Lbs. (+/- 10%)		Newton Meter (+/- 10%)	
			Dry	Lubricated	Dry	Lubricated
Cap Screws	9/16” hex wrench/socket	TCS 700063 3/8 –16 SAE Grade 8	36	29	49	39
Diaphragm Adapter	3/4” hex wrench	TCS 757010 1/2-13 Steel	21	17	28	23
Valve Seat	1-1/4” Hex wrench	TCS 757015 3/4-16 Delrin	21	17	28	23
Valve Plug	5/16” Allen wrench	TCS 757075 3/8”-NPT Forged Steel	1. Lubricate with Loctite 567 2. Tighten by hand 3. Tighten 1-1/2 to 2 turns with wrench			

782-20-LP IN-LINE CHECK VALVE ASSEMBLY

Part Number & Description	Tool	Bolt Size & Material	Foot Lbs. (+/- 10%)		Newton Meter (+/- 10%)	
			Dry	Lubricated	Dry	Lubricated
Cover Plate Screws	1/2” hex wrench/socket	TCS 740056 5/16 –18 SAE Grade 8	20	16	27	22

682 METER BODY REPAIR INSTRUCTIONS

¡WARNING!

All internal pressure must be relieved to ZERO (0) pressure before beginning disassembly of meter or components

I. A. Remove all parts and seals from the meter body and clean them. You may air blast parts with a **glass bead** material to clean parts.

B. Always replace bracket (#57), screws (#55) and (#35), plunger cups (#39) and Rulon washers (#13, 17 and 46).

C. Check for:
1. Excessive wear on the wobble plate (#48) guide holes.
2. Excessive wear on the guide posts on main pivot bracket assembly (#54).
3. Wear on the valve (#58).
4. Wear on the valve seat (#59).
5. Wrinkles on the sleeves in cylinders of the body.
   NOTE: Honing sleeves with Emory wheel may buff out wrinkles.

II. A. Mount valve seat (#59) to body (#61), with seat gasket (#60).

B. Lap valve (#58). Use Rectorseal® Clover lapping compound or equivalent on valve (#58) and seat (#59). Move valve repeatedly in a Figure 8 pattern. Thoroughly clean all the compound off the valve and seat when finished.

C. Replace plunger cups (#39) in piston (#41) and carefully place into cylinders. See the PLUNGER CUP REPAIR INSTRUCTIONS on page 32.

D. Main Pivot and Wobble Plate Assembly.
1. Screw the main pivot assembly (#51) all the way into main pivot bracket assembly (#54) and place pinion (#52) in its slot. Unscrew the pinion (#52) 5 full turns. This should help bring meter within range while calibrating.
2. Drop the slotted screws (#55) into bracket.
3. Place bracket with screws into main pivot bracket assembly.
4. Set 5/8” ball bearing (#50) into position.
5. Place the wear plate (#49) over the screws (#55).
6. Set wobble plate (#48) onto the screws (#55) and fasten down with lock nuts (#42) and lock washers (#43).
7. Set slack spring assembly (#46) on wobble plate post, then the Rulon washer (#45) and slack roller (#44).
8. Mount main pivot bracket assembly to valve (#58) and seat (#59) with lock washers (#43) and screws (#53).

E. Connect Pistons to Wobble Plate.
1. Slide piston plunger assembly (#41) into each cylinder, <u>being careful not to cut or crimp the plunger cup</u>.
2. Carefully slide connector (#37) over the wobble plate (#48) bearing seats.
3. Place 1/2” ball bearing (#47) onto wobble plate and cover with bearing seat (#36) and retainer (#34). Tighten bearing retainer (#34) with lock washers (#7) and screws (#35).
4. Rotate wobble plate (#48) and pistons (#41) through each cylinder to make sure of smooth flowing operation.

682 METER BONNET REPAIR INSTRUCTIONS

¡WARNING!

All internal pressure must be relieved to ZERO (0) pressure before beginning disassembly of meter or components

I. A. Remove all parts and seals from the meter bonnet and clean them. You may air blast parts with a **glass bead** material to clean parts.

B. Check for excessive wear or corrosion. NOTE: Problems with any of these following items will require a new bonnet or shafts.
1. Drive Shaft (#5).
2. Compensator Shaft (#25).
3. Bonnet (#11)
   a. Drive shaft packing surface.
   b. Compensator shaft surface.
   c. Counter drive gear assembly seat (#14) and post.

II. A. Insert drive shaft gear assembly (#18) with Rulon washer (#17) into the meter drive shaft packing. Install drive shaft packing Kit (#9). For more information, see the DRIVE SHAFT PACKING KIT INSTRUCTIONS on page 31.

B. Slide the counter drive gear assembly (#14) with Rulon washer (#13) over the post. Each meter uses 3 washers (#15) before the cotter pin (#16) is inserted.

C. Compensator Shaft Assembly
1. Insert retaining ring (#21) on to the compensator shaft (#25).
2. Insert compensator shaft into packing gland.
3. Install compensator shaft packing kit (#31). For more information, see the COMPENSATOR SHAFT PACKING KIT INSTRUCTIONS on page 30.

D. Mount Bonnet to Base.
1. Place O-ring (#12) into housing (#61).
2. Move compensator shaft (#25) to mate with pinion (#52) in the base by rotating the index disc (#28).
3. Mount bonnet (#11) to base (#61).
4. Insert screws (#32A and 32B) and washers (#33), then tighten.

COMPENSATOR SHAFT SEAL KIT INSTRUCTIONS

1) Remove screws that bolt the meter cover assembly to the meter body. Loosen and remove the entire meter cover assembly.
2) Cut seal wire and remove seal pin from index disc.
3) Unscrew hex nut from the compensator shaft. Remove compensator washer, index disc, index plate and compression spring from the shaft.
4) From inside the cover housing, turn the compensator shaft until the attached Truarc "E" retaining ring or cotter pin clears the edge of the counter drive gear. Slide the compensator shaft assembly from the housing.
5) Remove the spacer. Lift the old packing from the housing. Be sure there are no foreign particles left in the cavity and it is without corrosion.
6) Replace the compensator shaft assembly into the cover housing. Support the shaft from beneath while packing the new seal and spacer.
7) Place the packing tool (TCS 600200) over the compensator shaft. If you do not have the TCS packing tool, use masking or other adhesive tape to fully cover the threads on the compensator shaft to protect the seal from being damaged by the sharp threads as the seal is set into place (Figure 1).
8) Lubricate the seal on the inside up and outside O-ring prior to installation with bearing grease to help the seal slide into the packing cavity. Dynamic seal must have the stainless steel spring in the down position (Figure 2).
9) Remove the packing tool and place spacer over the shaft.
10) Use a long 3/8” socket and with a tap hammer, gently push seal into packing cavity.
11) Replace the compression spring, index plate, index disc, compensator washer and hex nut to the compensator shaft. Do not fully tighten the hex nut until the meter has been calibrated.
12) Reassemble the meter cover assembly to the meter body assembly and tighten down the screws. Calibrate the meter according to the calibration instructions.

1

2

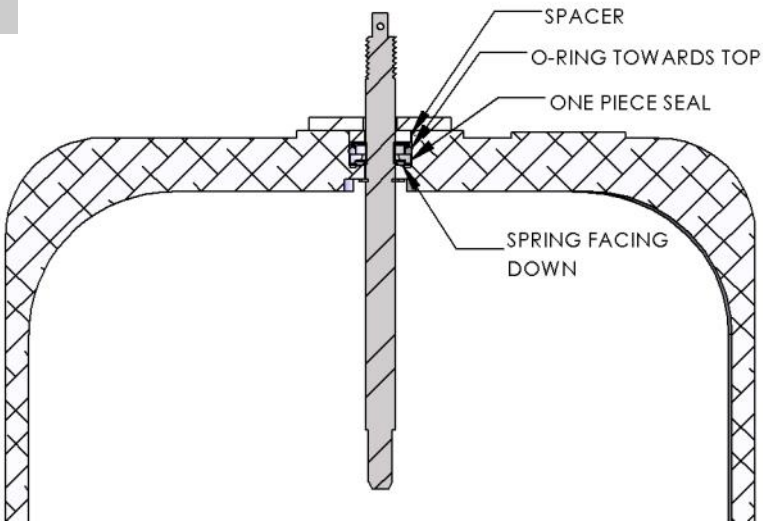

DRIVE SHAFT SEAL KIT INSTRUCTIONS

1) Remove screws that bolt the meter cover assembly to the meter body. Loosen and remove the entire meter cover assembly.
2) Carefully remove the roll pin from the drive shaft.
3) Remove (3) screws, (3) lock washers, and the compression washer.
4) From inside the cover housing, remove the cotter pin from the counter drive shaft. Remove the counter drive gear and washers. Slide the drive shaft assembly from the housing.
5) Lift the old packing from the housing. Be sure there are no foreign particles or corrosion in the cavity.
6) Replace the drive shaft assembly into the cover housing. Secure in position by reassembling the counter drive gear with the Rulon washers and cotter pin previously removed.
7) Support the counter drive shaft assembly from beneath while packing the spacer bearings, washers and the new seal.
8) Pack first spacer bearing with the closed end (flat surface) on top and push down into packing cavity. Rulon bearing material is preassembled into each spacer bearing. Use caution so as to not damage the surface of the Rulon material (Figure 1).
9) Lubricate the inside sealing surface and outer O-ring prior to installation using bearing grease. Place the packing tool (TCS 600100) over shaft to slide the dynamic seal into the packing cavity. The dynamic seal must have the stainless steel spring in the down position (Figure 2).
10) Insert second spacer bearing with closed end (flat surface) on the bottom.
11) Replace the compression washer with the screws and lock washers.
12) Insert the roll pin in the drive shaft. Be sure to support the shaft while doing this to prevent bending it.
13) Reassemble the meter cover assembly to the meter body assembly and tighten down the screws.

1

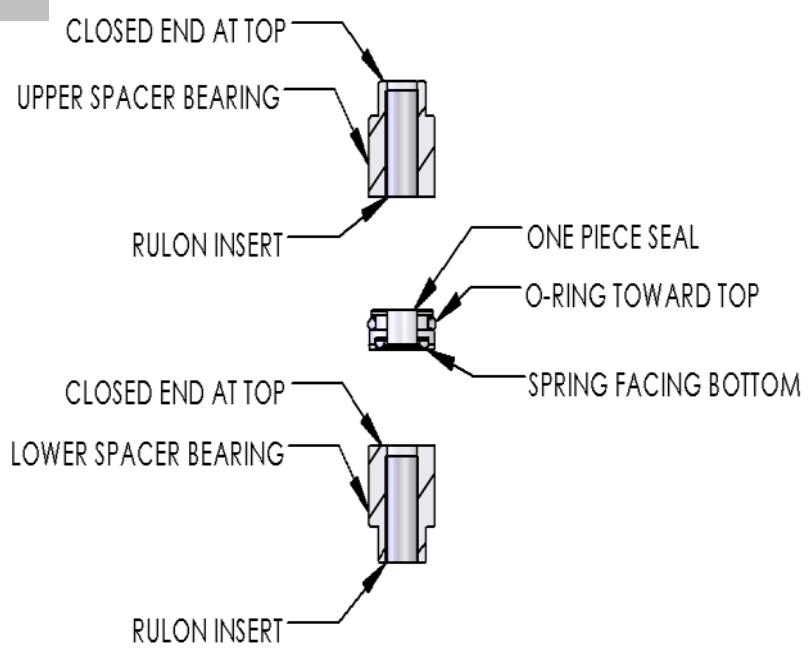

2

Plunger Replacement

1) Remove plunger assembly from meter body.
2) Loosen and remove two (2) round head screws and lift plunger cup support from plunger cup and plunger disc.

3) Discard the old plunger cup kit. Place the new plunger cup on the plunger disc. <u>Be sure the cup is evenly spaced on the plunger disc and support</u>.

4) Add the cup support and secure with the two (2) round head screws previously removed. NOTE: Apply Red Loctite 271 (or equivalent) to the screw threads.

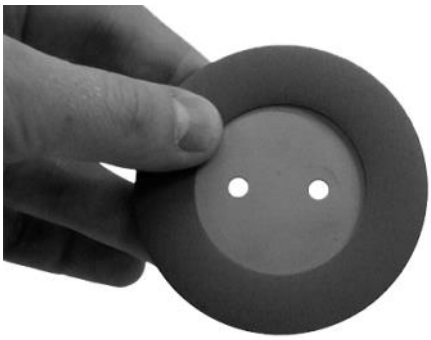

5) Form the cup by turning the plunger assembly in your hand using your thumb to roll the edge slightly.

6) After the cup is partially formed, place the plunger assembly into the meter body and press into the piston cylinder.

7) Turn the assembly in the piston cylinder to assure the cup is evenly formed to the cylinder.
8) Replace previously removed parts and reassemble meter. Test and calibrate meter for accuracy.

Disassembly of 720-20 Strainer Assembly

¡WARNING!

All internal pressure must be relieved to ZERO (0) pressure before beginning disassembly of meter or components

1) Using a hex or socket wrench, remove the four screws and washers from the cover plate.
2) Remove the cover plate and O-ring from the housing.
3) Remove the strainer screen.
4) Check inside housing for any debris and remove using a clean cloth.
5) Clean strainer screen by rinsing with a liquid cleaning agent compatible to your product application. A brush may be used to remove imbedded particles. If screen is too dirty to clean, then replace the screen.
6) Wipe clean the face of the cover plate and seal ring. Check O-rings for damage and replace as needed.

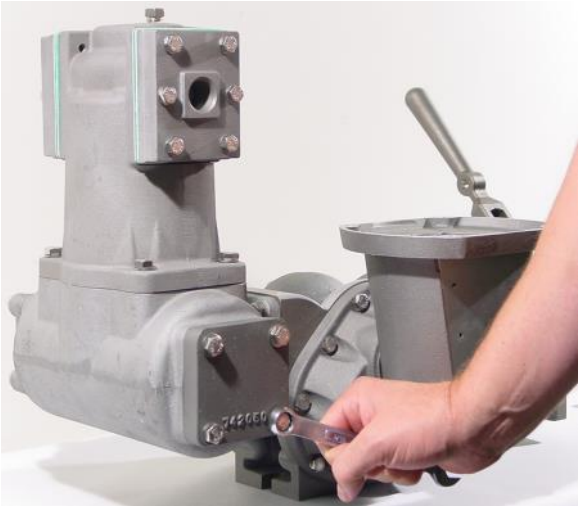

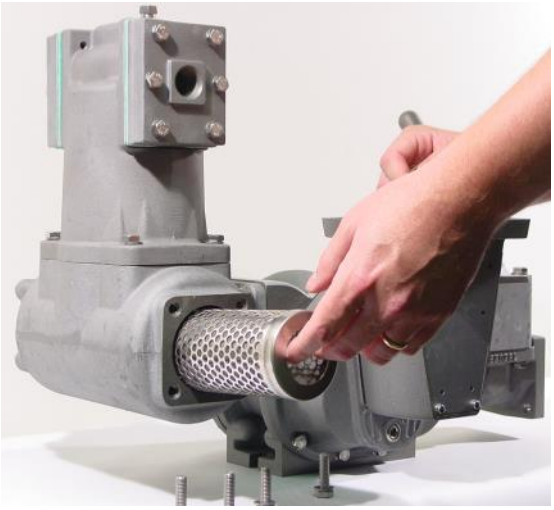

Reassembly of 720-20 Strainer Assembly

1) Replace the strainer screen into the housing.
2) Place the end cover O-ring in the groove of the end cover.
3) Put the end cover with O-ring installed on the strainer housing.
   Replace and fasten end cover with the 4 screws and washers. Tighten the screws according to the torque chart.

Disassembly of 730 Vapor Eliminator

¡WARNING!

All internal pressure must be relieved to ZERO (0) pressure before beginning disassembly of meter or components

1) Using a 1/2” wrench or socket, remove the cover screws from air eliminator cover plate.
2) Remove cover plate.
3) Remove valve plate, inspect and replace as needed.

1

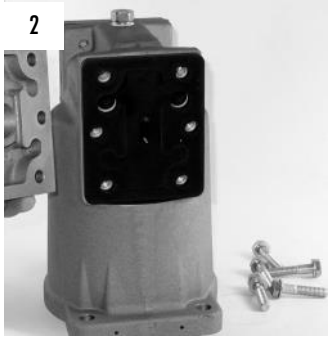
2

3

1) To remove the air eliminator assembly, remove the four screws and washers attaching it to the strainer assembly.
2) Using a flathead screwdriver, remove the screws attaching reed valves to air eliminator housing.
3) Remove the two screws on the diffuser screen.
4) Slide out diffuser shaft assembly.
5) Remove the two screws attaching reed valve to the float assembly. Inspect and replace reed valves as needed.

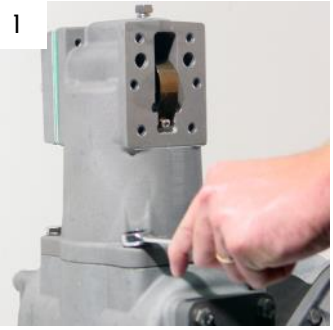
1

2

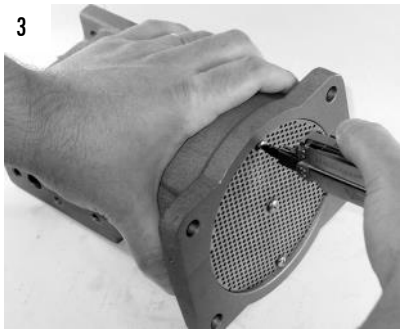
3

4

5

Assembly of 757-10LP Differential Valve

¡WARNING!

All internal pressure must be relieved to ZERO (0) pressure before beginning disassembly of meter or components

DIAPHRAGM ASSEMBLY

1) Insert O-ring (#9) into the O-ring groove of seal housing (#8). Place seal cap (#10) beveled side up, on top of O-ring (#9).
2) Apply a Loctite 242 Blue threadlocker onto the threads of screw (#11). Thread screw (#11) through seal cap (#8). Tighten by hand.
3) Flip seal housing (#9) threaded post up and re-secure in vise. Applying only enough force to keep the seal housing secure.
4) Place diaphragm (#7) onto the threaded post of seal housing (#8), place diaphragm disk (#6), beveled side up, on top of diaphragm. While maintaining even pressure, slowly push diaphragm disk (#6) and diaphragm (#7) down the threaded post of seal housing (#8) until seated.
5) Lightly anti-seize the top three threads of seal housing (#8) threaded post. Install nut (#5) onto the threaded post of seal housing (#8).
6) Set completed diaphragm assembly aside in a clean area.

FINAL ASSEMBLY

1) Apply a Loctite 242 Blue threadlocker to the op three threads of valve housing (#12).
2) Insert diaphragm assembly, O-ring side down, into the threaded side of valve housing (#12).
3) Seat spring (#4) onto diaphragm disk (#6).
4) Seat spring stop (#3) on top of spring (#4), post side down.
5) Slide steel nut (#1) over cap (#2) and thread onto valve housing (#12) until hand tight.
6) Secure steel nut (#1) to valve housing (#12).
7) Remove from vise and inspect.

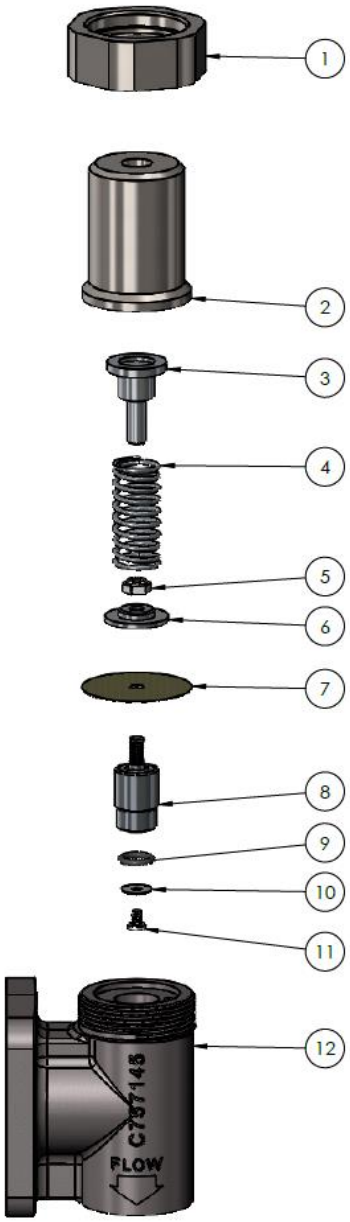

Assembly of 757-20LP Differential Valve

¡WARNING!

All internal pressure must be relieved to ZERO (0) pressure before beginning disassembly of meter or components

DIAPHRAGM ASSEMBLY

1) Insert O-rings (#10) on top and bottom of diaphragm poppet (#11).
2) Thread seat (#12) onto diaphragm poppet (#11) with cylindrical side closest to poppet.
3) Install spring retainer (#6) onto diaphragm adaptor (#5).
4) Place O-ring (#7) over shaft of diaphragm adaptor (#5) and up to spring retainer (#6) surface.
5) Insert diaphragm back-up plate (#8) with bevel up over shaft of diaphragm adaptor (#5).
6) Place diaphragm (#15) with bevel down, onto diaphragm adaptor (#5).
7) Insert diaphragm back-up plate (#8) with bevel Down, over shaft of diaphragm adaptor (#5).

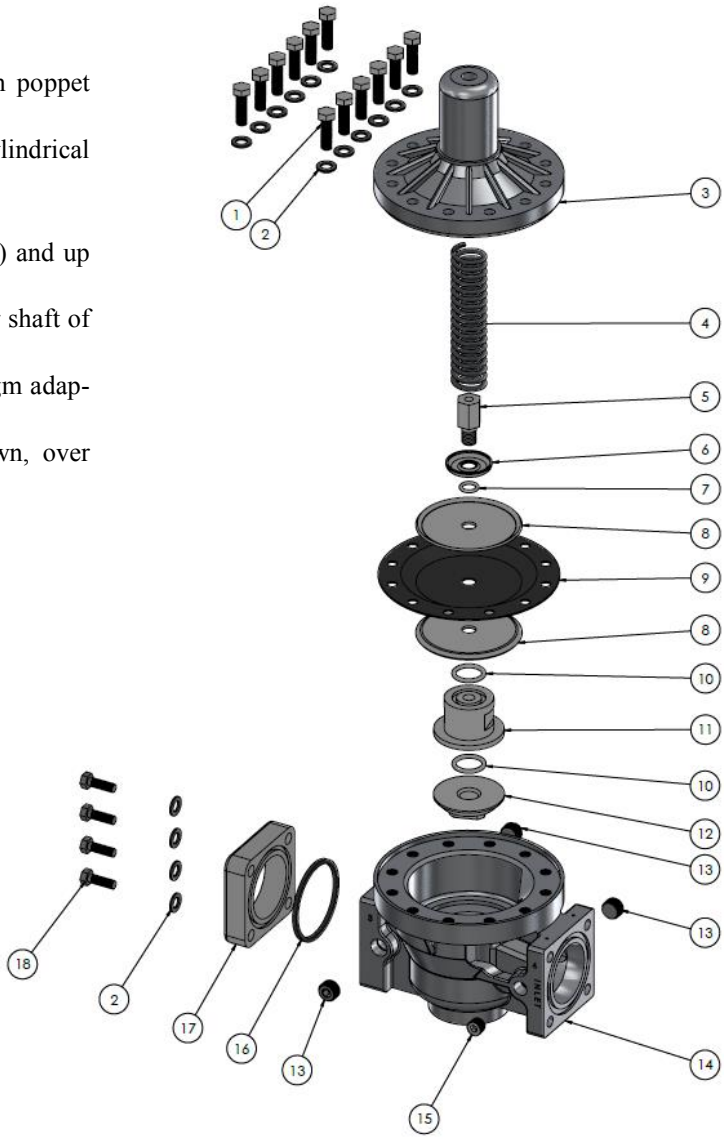

FINAL ASSEMBLY

1) Insert diaphragm assembly into valve base assembly (#14) with diaphragm adaptor (#5) up.
2) Place spring (#4) over diaphragm adaptor (#5).
3) Install valve cap (#3) on top of spring (#4).
4) Insert threaded rod (#) into top of valve cap (#3) and thread rod down into diaphragm adaptor (#5) so 4-10 threads are engaged.
5) Place fender washer (TCS 5/16FENDER) onto threaded rod (TCS 757060).
6) 6) Thread nut (TCS 757070) onto thread rod (TCS 757060).
7) Tighten nut (TCS 757070) down until the spring (#4) becomes depressed enough to get the bolts (#1) started.
8) Place 1 washer (#2) on each of 4 bolts (#1) and put them into valve cap (#3) at an equal distance from one another.
9) Using the torque specifications on page 30, tighten the 4 bolts (#1) down.
10) Remove threaded rod (TCS 757060), fender washer (TCS 5/16FENDER), and nut (TCS 757070) from unit.
11) Insert the remaining washers (#2) and bolts (#1) into the valve cap (#3).
12) Using the torque specifications on page 30, tighten the remaining bolts (#1) down.
13) Check to make sure all bolts (#1) are tightened to torque specs when finished.

Assembly of 782-20LP Check Valve

¡WARNING!

All internal pressure must be relieved to ZERO (0) pressure before beginning disassembly of meter or components

CHECK VALVE ASSEMBLY

1) Insert pressure relief valve (#2) into valve housing (#1).

2) Slide piston ring (#4) onto valve housing (#3).

3) Place O-ring (#6) over shaft of valve housing (#3) and up to piston ring (#4) surface.

4) Install spacer (#7) over shaft of valve housing (#3) and over O-ring (#6).

5) Insert O-ring (#5) into groove of O-ring retainer (#8).

6) Slide O-ring retainer (#8) over shaft of valve housing (#3).

7) Using the torque specifications, apply and tighten the nut (#9) on the valve housing (#3).

8) Install assembly into housing (#1) with O-ring facing pipe threads of housing (#1).

9) Press bearing sleeve (#12) into spring holder (#11).

10) Insert spring holder (#11) into housing (#1) with cylinder facing pipe threads.

11) Install retaining ring (#13) into groove of housing (#1).

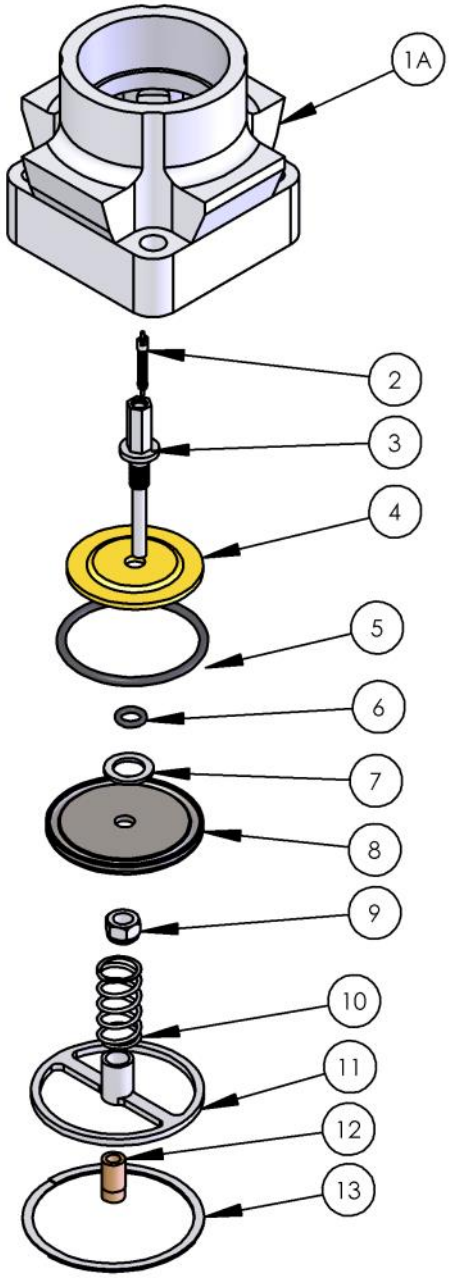

Meter Trouble Shooting

PROBLEM: The meter allows product to pass through it, but the register on the meter doesn't move.

A) Check the reset knob on the register. On older style Veeder-Root registers, this knob can become stuck-in, which will disengage registration. In this case, though, the totalizer would still register.
B) Check the screws that hold the gear plate onto the bottom of the register. If they become loose, neither the register nor the totalizer will register.
C) The drive-gear coupling shaft (in the gear plate under the register) is broken or pin is missing.
D) The retaining ring on the counter drive gear has come off or broken, allowing the drive gear to disengage from the drive shaft gear assembly.
E) The post on the wobble plate inside the meter has snapped off. When this happens, it usually indicates that air has been pumped though the meter.
F) The connector on the piston assembly inside the meter is broken, allowing product to pass.

PROBLEM: The meter will not deliver product and will not register.

A) Check any air eliminator and/or strainer screens in the system for blockage. Also, check all valves in the system for proper operation. If the problem still hasn't been discovered after those checks, determine what the pressure is before and after the meter (with the pump running). Equal readings would indicate the meter isn't necessarily the problem.
B) On older style offset Tokheim 682 meters, there is a back pressure valve on the discharge of the meter, which can become stuck shut.
C) If it is determined that the problem is in the meter itself, then the meter valve (inside the meter) is stuck down onto the valve seat.

PROBLEM: The meter delivers more product then what is registered.

A) First, the meter should be tested for repeatability. To test repeatability, run a fast test (at a flow rate at or near the maximum system flow rate) into your prover and record how much the meter is under registering. Do NOT change the meter's calibration. Then, run a slow test (at a lower flow rate) and again record the amount that the meter is under registering
B) If the results from the fast and the slow test are the same or close to the same, the meter has repeatability and can be calibrated. If the test results differ beyond the rated tolerance of the meter, then repairs are necessary.
NOTE: If the meter is more than 7% inaccurate (register reading of 4.65 or less gallons in a 5 gallon test), then it cannot be calibrated until repairs are made.

PROBLEM: The meter delivers less product than what it registers.

A) The meter could have the wrong gear train in its register.
B) Check for leaks on the suction side of the pump, including the pump seal. Air, which is sucked into the system and pushed though the meter would affect registration.
C) After eliminating these possible causes, check the meter's repeatability, as outlined on pages 10 to 12.
D) Register may need repair.

PROBLEM: The meter has excessive knocking noise.

A) Check the calibrator on the meter. If it is adjusted too far out, excessive knocking is possible.
B) If the problem isn't the calibrator, then the meter valve or another internal part may need repair or replacement.

Vapor Eliminator Trouble Shooting

PROBLEM: Product is flowing from the Air Eliminators vents

A) Foreign matter located in between seal plate orings and metal reeds.
B) The seal plate oring may be worn through service life.
C) The seal plate oring may be cut or dislodged and requires replacement.
D) The float may have been punctured, containing liquid, not allowing the float to rise and seal the air vents.
E) The float may have been ruptured from a surge of pressure within the system.
F) The metal reeds may be fatigued and requires replacement.
G) The metal reeds may be out of alignment with the seal plate.

PROBLEM: The meter is still registering air within the system

A) The air return line is not the required minimum of 1/2" ID.
B) The metering system has insufficient means of eliminating air to the atmosphere. Some examples: An incorrectly installed "Catch Can" reservoir is located lower than the air eliminator itself. The reservoir is allowed to become full or the vent is improperly sized.

There can be numerous reasons why the meter may still register air. First look at the system configuration and see where air is being introduced into the system. Then determine if the meter is registering "free air" or "entrained air". Free Air is much easier to remove from the metering system and may require the use of a Spring Loaded Back Check Valve and/or a Differential Air Check Valve and/or a High Volume Strainer to help the air eliminator operate more effectively.

Entrained Air is much more difficult to remove. Typically the best way to eliminate Entrained Air will be to remove the source of entry of air into the system. Some typical examples would be a cavitating pump or a leaking pump or faulty valve seals. A High Volume Strainer may help accumulate the liquid long enough to disperse the Entrained Air from the system. See Air Elimination in the Service Manual for more information.

Differential Valve Trouble Shooting

PROBLEM: Valve fails to open

A) Damaged vapor return line with no pressure relief from Valve Cap (Bonnet)
B) Puncture or Tear in Valve Diaphragm

PROBLEM: Product continues to flow through valve

A) Valve Seat has excessive wear or is damaged.
B) Valve Poppet is not secure and requires tightening.
C) Faulty Solenoid Valve (foreign material or ice).

Material Safety Data Sheet

24 HOUR EMERGENCY ASSISTANCE
(260) 833-3173

GENERAL MSDS ASSISTANCE
(260) 484-0301

CODE: RPS

HAZARD RATING> LEAST-0 SLIGHT-1 MODERATE-2 HIGH-3 EXTREME-4

DR LUBRICANTS, INC.
4611 NEWAYGO ROAD, SUITE D
FORT WAYNE, IN 46808

DATE: 01/21/06

TELEPHONE NUMBER: (260 484-0301

SECTION I - PRODUCT IDENTIFICATION

PRODUCT: **RP 1060**

SECTION II - COMPOSITION AND HAZARDOUS INFORMATION*

CHEMICAL NAME	CAS NUMBER	WT. PERCENT IS LESS THAN	OCCUPATIONAL EXPOSURE LIMITS (TLV-TWA) (TLV-STEL)
PETROLEUM HYDROCARBON	64741-65-7	45.0	100MG/M3
PETROLEUM HYDROCARBON	64742-53-6	65.0	5MG/M3

*ITEMS NOT SHOWN ARE NOT LISTED IN THE OSHA - T.S.C.A. HAZARDOUS CHEMICALS LISTING.

SECTION III - PHYSICAL DATA

BOILING RANGE:	NA	VAPOR DENSITY:	NA
ODOR:	PETROLEUM ODOR	EVAPORATION RATE:	NA
APPEARANCE	AMBER LIQUID	SOLUBILITY:	INSOLUBLE
VOLATILE BY WEIGHT:	NA	PRODUCT DENSITY:	0.829
VOLATILE BY VOLUME:	NA		

SECTION IV - FIRE AND EXPLOSION HAZARD DATA

FLAMMABILITY CLASSIFICATION:	COMBUSTIBLE	FLASH POINT: (CLEVELAND OPEN CUP)	170 F	LEL:	NA
				UEL:	NA
DOT:	COMBUSTIBLE LIQUID				
EXTINGUISHING MEDIA:	CARBON DIOXIDE, DRY CHEMICAL, FOAM				

SECTION IV - FIRE AND EXPLOSION HAZARD DATA

UNUSUAL FIRE AND EXPLOSION HAZARDS : DO NOT DIRECT A SOLID STREAM OF WATER ONTO BURNING PRODUCT. THIS MAY CAUSE SPREADING AND INCREASE THE FIRES INTENSITY. COMBUSTION MAY PRODUCE: OXIDES OF CARBON, AND INCOMPLETELY BURNED HYDROCARBONS IN THE FORM OF FUMES AND SMOKE.

SPECIAL FIREFIGHTING PROCEDURES: WEAR A SELF-CONTAINED BREATHING APPARATUS WITH FULL FACEPIECE.

SECTION V - HEALTH HAZARD DATA

EFFECTS OF OVER EXPOSURE: MAY CAUSE MILD EYE IRRITATION AND REDNESS. PROLONGED OR REPEATED EXPOSURE TO THE SKIN MAY RESULT IN LOSS OF NATURAL OILS ACCOMPANIED BY DRYNESS, CRACKING AND DERMATITIS. INGESTION MAY RESULT IN NAUSEA, DIARRHEA AND GASTRO INTESTINAL IRRITATION. OVEREXPOSURE TO MIST MAY CAUSE UPPER RESPIRATORY TRACT IRRITATION AND DIFFICULTY BREATHING.

MEDICAL CONDITIONS PRONE TO AGGRAVATION BY EXPOSURE: NONE KNOWN.

PRIMARY ROUTE(S) OF ENTRY: DERMAL INHALATION INGESTION.

EMERGENCY AND FIRST AID PROCEDURES: IN CASE OF EYE CONTACT, IMMEDIATELY FLUSH EYES WITH CLEAN WATER FOR AT LEAST 15 MINUTES. IF EYE IRRITATION PERSISTS, CONTACT A PHYSICIAN. IN CASE OF SKIN CONTACT, REMOVE ANY CONTAMINATED CLOTHING AND RINSE SKIN THOROUGHLY WITH WATER FOR AT LEAST 15 MINUTES. IF SKIN IRRITATION PERSISTS, CONTACT A PHYSICIAN. IN CASE OF OVEREXPOSURE TO MIST, REMOVE VICTIM TO FRESH AIR: IF BREATHING IS DIFFICULT ADMINISTER OXYGEN: AND CONTACT A PHYSICIAN IMMEDIATELY. IF PRODUCT IS INGESTED DO NOT INDUCE VO MITING: CONTACT A PHYSICIAN.

Check us out at www.TCSmeters.com!

Material Safety Data Sheet (Continued)

==========

SECTION VI - REACTIVITY DATA

==========

STABILITY: THIS PRODUCT IS STABLE UNDER NORMAL STORAGE CONDITIONS.

HAZARDOUS POLYMERIZATION: WILL NOT OCCUR UNDER NORMAL CONDITIONS.

HAZARDOUS DECOMPOSITION PRODUCTS: THERMAL DECOMPOSITION MAY RESULT IN THE FORMATION OF: OXIDES OF CARBON, AND INCOMPLETELY BURNED HYDROCARBONS IN THE FORM OF FUMES AND SMOKE.

CONDITIONS TO AVOID: AVOID CONTACT WITH OPEN FLAME, STORE IN ROOM TEMPERATURE AREA.

INCOMPATIBILITY: AVOID CONTACT WITH STRONG OXIDIZING AND REDUCING AGENTS AND STRONG ALKLI.

==========

SECTION VII - SPILL OR LEAK PROCEDURES

==========

STEPS TO BE TAKEN IN CASE MATERIAL IS RELEASED OR SPILLED: FOR SMALL SPILLS: SOAK UP SPILL WITH ABSORBENT MATERIAL. FOR LARGE SPILLS: DIKE SPILL AND PUMP INTO DRUMS FOR PROPER DISPOSAL.

WASTE DISPOSAL METHOD: DISPOSE OF IN ACCORDANCE WITH ALL LOCAL STATE AND FEDERAL REGULATIONS.

==========

SECTION VIII - SAFE HANDLING AND USE INFORMATION

==========

RESPIRATORY PROTECTION: NORMALLY NOT REQUIRED, HOWEVER, WHEN THE TLV IS EXCEEDED WEAR THE APPROPRICATE MSHA/ NIOSH APPROVED RESPIRATOR.

VENTILATION: PROVIDE ADEQUATE VENTILATION (SUCH AS MECHANICAL OR LOCAL) TO ASSURE TLV IS NOT EXCEEDED.

PROTECTIVE GLOVES: NORMALLY NOT REQUIRED, HOWEVER, IF HANDS ARE FREQUENTLY IN FLUID WEAR OIL AND CHEMICAL IMPERVIOUS GLOVES.

EYE PROTECTION: SAFETY GLASSES REQUIRED FOR NORMAL USAGE, WEAR CHEMICAL GOGGLES WHEN EXCESSIVE SPLASHING MAY OCCUR.

OTHER PROTECTIVE EQUIPMENT: NORMALLY NOT REQUIRED, HOWEVER, WHERE REPEATED CONTACT OCCURS, WEAR IMPERVIOUS CLOTHING AND BOOTS.

HYGIENIC PRACTICES: FOLLOW STANDARD INDUSTRIAL HYGIENE PRACTICES. LAUNDER ANY CONTAMINATED CLOTHING BEFORE RE-USE.

==========

SECTION IX - SPECIAL PRECAUTIONS

==========

PRECAUTIONS TO BE TAKEN IN HANDLING AND STORAGE: DO NOT STORE IN THE PRESENCE OF HEAT, SPARKS, FLAME OR ANY OTHER SOURCES OF IGNITION. STORE AWAY FROM STRONG OXIDIZING AGENTS. EMPTY DRUMS MAY CONTAIN PRODUCT RESIDUES. ALL SAFETY PRECAUTIONS TAKEN WHEN HANDLING THIS PRODUCT SHOULD ALSO BE TAKEN WHEN HANDLING EMPTY DRUMS AND CONTAINERS.

OTHER PRECAUTIONS: NONE

==========

SECTION X - HMIS/NFPA RATINGS

==========

HMIS:HEALTH:1 FLAMMABILITY:2 REACTIVITY:0 PERSONAL PROTECTION:C
NFPA:HEALTH:1 FLAMMABILITY:2 REACTIVITY:0 SPECIFIC HAZARD:

==========

SECTION XI - OTHER REGULATORY INFORMATION

==========

LAND (TDG)

PROPER SHIPPING NAME: PETROLEUM DISTILLATES, N.O.S.
HAZARD CLASS & DIVISION: 3
UN NUMBER: 1268
PACKING GROUP: III

==========

THE INFORMATION CONTAINED HEREIN IS, TO THE BEST OF OUR KNOWLEDGE AND BELIEF, ACCURATE. HOWEVER, SINCE THE CONDITIONS OF HANDLING AND USE ARE BEYOND OUR CONTROL, WE MAKE NO GUARANTEE OF RESULTS, AND ASSUME NO LIABILITY FOR DAMAGES INCURRED BY USE OF THIS MATERIAL. IT IS THE RESPONSIBILITY OF THE USER TO COMPLY WITH ALL APPLICABLE FEDERAL, STATE AND LOCAL LAWS AND REGULATIONS.

==========

NOTES

Check us out at www.TCSmeters.com!

Warranty Information

New 682 piston meters, equipment or components manufactured by Total Control Systems, a division of Murray Equipment, Inc. (TCS) with which this warranty is enclosed, are warranted by TCS to the original purchaser only for a period of SIXTY (60) months from the date of shipment, to be free, under normal use and service, from defects in material and workmanship.

Defects occurring within the stated warranty period, TCS will repair or replace, at TCS's option; provided that part or parts are returned to TCS transportation charges prepaid, and TCS's examination discloses the parts or workmanship to have been defective upon delivery to the purchaser.

EXCLUSIONS: Warranty does not cover any parts and equipment not manufactured by TCS, but these items may be covered by separate warranties of their respective manufacturers. This warranty does not extend to any equipment that has been subjected to misuse, negligence or accident or if operated in any manner other than in accordance with TCS's operating instructions and specifications.

CLAIM PROCEDURES: In order to obtain performance by TCS of its obligations under this warranty, the original purchaser must obtain a Return Goods Authorization (RGA) number from TCS's customer service department within 30 days of discovery of a purported breach of warranty, but not later than the expiration of the warranty period. Once authorization is received, return the RGA and defective meter, piece of equipment, or component covered by this warranty, with transportation charges prepaid, to TCS together with a written RGA form, MSDS sheet and packaging clearly marked with the RGA number. All RGA procedures must strictly be followed for safety and quick resolve. TCS reserves the right of refusal for shipments sent back freight collect and/or without proper paperwork.

LIMITATIONS: There are no other warranties of any kind, expressed or implied. TCS specifically disclaims any warranty of merchantability or of fitness for any particular purpose. TCS will determine if all parts or meter defect falls within the warranty guidelines and will repair or replace within a reasonable time span. TCS is not responsible for any in or out bound freight. TCS's sole obligation shall represent the buyer's sole and exclusive remedy shall be to repair or at TCS's option to replace any product or part determined to be defective. In no event shall TCS be liable for any special, direct, indirect, incident, consequential or other damages of similar nature, including without limitation, loss of profits, products, production time, or loss of expenses of any nature incurred by the buyer or any third party. TCS has not authorized on its behalf any representation or warranties to be made, nor any liability to be assumed except as expressly provided herein; there is no other express or implied warranty.

REPAIR WARRANTY: All repair work is warranted for ninety (90) days from the date of shipment to customer. Some parts may be warranted for longer periods by the Original Equipment Manufacturer.

DESIGN AND EQUIPMENT CHANGES: Any changes in design or improvements added shall not create any obligation to install same on equipment previously sold or ordered.

The Standard of Measurement

2515 Charleston Place
Fort Wayne, IN 46808

Toll Free: (800) 348-4753
Phone: (260) 484-0382
Fax: (260) 484-9230
Email: sales@tcsmeters.com

Check us out at www.TCSmeters.com!